CHRYSLER

2019

300

OWNER'S MANUAL

VEHICLES SOLD IN CANADA

With respect to any Vehicles Sold in Canada, the name FCA US LLC shall be deemed to be deleted and the name FCA Canada Inc. used in substitution therefore.

DRIVING AND ALCOHOL

Drunken driving is one of the most frequent causes of accidents.

Your driving ability can be seriously impaired with blood alcohol levels far below the legal minimum. If you are drinking, don't drive. Ride with a designated non-drinking driver, call a cab, a friend, or use public transportation.

WARNING!
Driving after drinking can lead to an accident. Your perceptions are less sharp, your reflexes are slower, and your judgment is impaired when you have been drinking. Never drink and then drive.

This manual illustrates and describes the operation of features and equipment that are either standard or optional on this vehicle. This manual may also include a description of features and equipment that are no longer available or were not ordered on this vehicle. Please disregard any features and equipment described in this manual that are not on this vehicle.

FCA US LLC reserves the right to make changes in design and specifications, and/or make additions to or improvements to its products without imposing any obligation upon itself to install them on products previously manufactured.

Copyright © 2018 FCA US LLC

TABLE OF CONTENTS

SECTION		PAGE
1	INTRODUCTION	3
2	GRAPHICAL TABLE OF CONTENTS	7
3	GETTING TO KNOW YOUR VEHICLE	13
4	GETTING TO KNOW YOUR INSTRUMENT PANEL	119
5	SAFETY	145
6	STARTING AND OPERATING	217
7	IN CASE OF EMERGENCY	299
8	SERVICING AND MAINTENANCE	341
9	TECHNICAL SPECIFICATIONS	403
10	MULTIMEDIA	419
11	CUSTOMER ASSISTANCE	465
12	INDEX	471

INTRODUCTION

CONTENTS

■ INTRODUCTION 4
■ HOW TO USE THIS MANUAL 5
□ Essential Information 5
□ Symbols 5
■ WARNINGS AND CAUTIONS 5
■ VEHICLE MODIFICATIONS/ALTERATIONS 5

INTRODUCTION

Dear Customer,

Congratulations on selecting your new vehicle. Be assured that it represents precision workmanship, distinctive styling, and high quality. This Owner's Manual has been prepared with the assistance of service and engineering specialists to acquaint you with the operation and maintenance of your vehicle. It is supplemented by Warranty Information, and customer oriented documents. In the attached Warranty Booklet, you will find a description of the services that FCA offers to its customers, the Warranty Certificate and the details of the terms and conditions for maintaining its validity. Please take the time to read all of these publications carefully before driving your vehicle for the first time. Following the instructions, recommendations, tips, and important warnings in this manual will help assure safe and enjoyable operation of your vehicle. Be sure you are familiar with all vehicle controls, particularly those used for braking, steering, transmission, and transfer case shifting (if equipped). Learn how your vehicle handles on different road surfaces. Your driving skills will improve with experience.

This Owner's Manual describes all versions of this vehicle. Options and equipment dedicated to specific markets or versions are not expressly indicated in the text. Therefore, you should only consider the information which is related to the trim level, engine, and version that you have purchased. Any content introduced throughout the Owner's Information, that may or may not be applicable to your vehicle, will be identified with the wording "If Equipped". All data contained in this publication are intended to help you use your vehicle in the best possible way. FCA aims at a constant improvement of the vehicles produced. For this reason, it reserves the right to make changes to the model described for technical and/or commercial reasons. For further information, contact an authorized dealer.

NOTE: After reviewing the Owner's Information, it should be stored in the vehicle for convenient referencing, and remain with the vehicle when sold.

When it comes to service, remember that an authorized dealer knows your vehicle best, has factory-trained technicians and genuine MOPAR® parts, and cares about your satisfaction.

HOW TO USE THIS MANUAL

Essential Information

Consult the Table of Contents to determine which section contains the information you desire.

Since the specification of your vehicle depends on the items of equipment ordered, certain descriptions and illustrations may differ from your vehicle's equipment.

The detailed index at the back of this Owner's Manual contains a complete listing of all subjects.

Symbols

Some vehicle components have colored labels whose symbols indicate precautions to be observed when using this component. Refer to "Warning Lights and Messages" in "Getting To Know Your Instrument Panel" for further information on the symbols used in your vehicle.

WARNINGS AND CAUTIONS

This Owner's Manual contains **WARNINGS** against operating procedures that could result in a collision, bodily injury and/or death. It also contains **CAUTIONS** against procedures that could result in damage to your vehicle. If you do not read this entire Owner's Manual, you may miss important information. Observe all Warnings and Cautions.

VEHICLE MODIFICATIONS/ALTERATIONS

WARNING!

Any modifications or alterations to this vehicle could seriously affect its roadworthiness and safety and may lead to a collision resulting in serious injury or death.

GRAPHICAL TABLE OF CONTENTS

CONTENTS

- FRONT VIEW 8
- REAR VIEW 9
- INSTRUMENT PANEL 10
- INTERIOR 11

FRONT VIEW

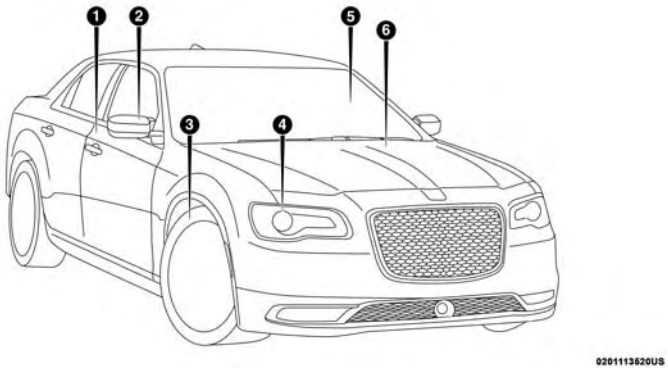

Front View

1 — Doors
2 — Exterior Mirrors
3 — Wheels/Tires
4 — Headlights
5 — Windshield
6 — Hood/Engine Compartment

REAR VIEW

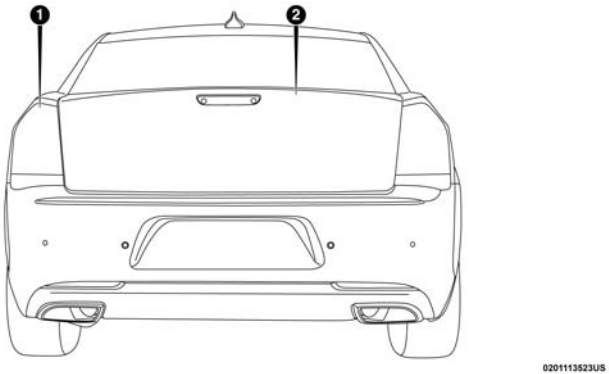

Rear View

1 — Taillight

2 — Trunk

INSTRUMENT PANEL

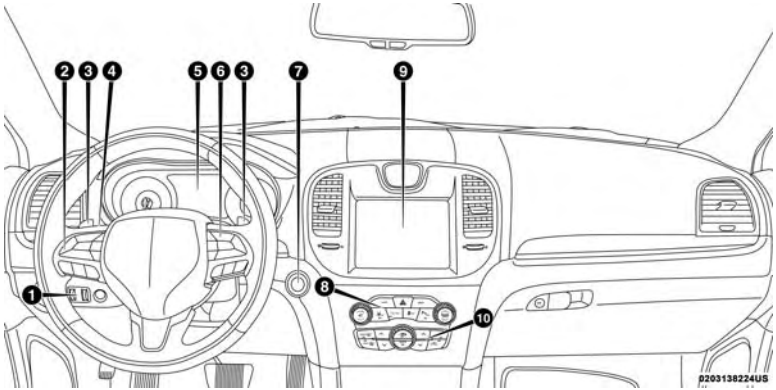

Instrument Panel

1 — Dimmer Controls
2 — Instrument Cluster Display Controls
3 — Paddle Shifters
4 — Multifunction Lever (Behind Steering Wheel)
5 — Instrument Cluster
6 — Speed Controls
7 — Ignition
8 — Switch Panel
9 — Uconnect System
10 — Climate Controls

INTERIOR

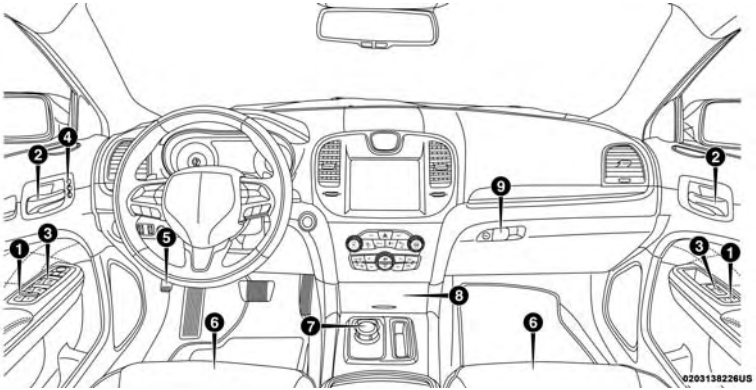

Interior

1 — Door Locks
2 — Door Handles
3 — Window Switches
4 — Memory Seat Switches
5 — Parking Brake
6 — Seats
7 — Gear Selector
8 — Storage Compartment
9 — Glove Compartment

GETTING TO KNOW YOUR VEHICLE

CONTENTS

■ VEHICLE USER GUIDE — IF EQUIPPED 17

■ KEYS 19

□ Key Fob 19

■ IGNITION SWITCH 27

□ Keyless Push Button Ignition 27

□ Vehicle On Message 29

■ REMOTE START — IF EQUIPPED 30

□ How To Use Remote Start — If Equipped 30

□ Remote Start Abort Message On The Instrument Cluster Display — If Equipped 31

□ To Enter Remote Start Mode 31

□ To Exit Remote Start Mode Without Driving The Vehicle 32

□ To Exit Remote Start Mode And Drive The Vehicle 32

□ Remote Start Comfort Systems — If Equipped . . .33

□ General Information 33

■ SENTRY KEY 33

□ Key Programming 34

□ Replacement Keys 34

□ General Information 35

■ VEHICLE SECURITY ALARM — IF EQUIPPED . . .35

□ To Arm The System 35

□ To Disarm The System 36

□ Rearming Of The System 37

□ Tamper Alert 37

■ DOORS 37

□ Manual Door Locks 37

□ Power Door Locks 38

- Keyless Enter-N-Go — Passive Entry 39
- Automatic Unlock Doors On Exit 42
- Automatic Door Locks — If Equipped 43
- Child-Protection Door Lock System — Rear Doors 43

■ SEATS 44
- Manual Adjustment (Rear Seats) 45
- Power Front Seats 46
- Driver Memory Seat — If Equipped 48
- Heated Seats — If Equipped 52
- Front Ventilated Seats — If Equipped 54

■ HEAD RESTRAINTS 55
- Reactive Head Restraints — Front Seats 55
- Rear Head Restraints 56
- Front Head Restraint Removal 57

■ STEERING WHEEL 58
- Manual Tilt/Telescoping Steering Column — If Equipped 58
- Power Tilt/Telescoping Steering Column — If Equipped 58
- Heated Steering Wheel — If Equipped. 59

■ MIRRORS 60
- Automatic Dimming Mirror — If Equipped 60
- Outside Mirrors 61
- Driver's Outside Automatic Dimming Mirror — If Equipped. 61
- Outside Mirrors With Turn Signal And Approach Lighting — If Equipped 62
- Power Mirrors 62
- Power Folding Outside Mirrors — If Equipped. . .63
- Heated Mirrors — If Equipped 64
- Tilt Side Mirrors In Reverse — If Equipped 64
- Illuminated Vanity Mirrors — If Equipped 65

■ EXTERIOR LIGHTS 66
- Multifunction Lever 66
- Headlight Switch 66

- Daytime Running Lights (DRL) 67
- High/Low Beam Switch 67
- Automatic High Beam — If Equipped 67
- Flash-To-Pass 68
- Automatic Headlights 68
- Parking Lights 68
- Headlights On With Wipers 68
- Adaptive Bi-Xenon High Intensity Discharge Headlights — If Equipped 69
- Headlight Time Delay 69
- Lights-On Reminder 69
- Fog Lights — If Equipped 70
- Turn Signals 70
- Lane Change Assist — If Equipped 70

■ INTERIOR LIGHTS 71
- Courtesy Lights 71

■ WINDSHIELD WIPERS AND WASHERS 75
- Wiper Operation 76
- Rain Sensing Wipers 77

■ CLIMATE CONTROLS 78
- Automatic Climate Control Overview 79
- Climate Control Functions 84
- Automatic Temperature Control (ATC) 84
- Operating Tips 85

■ WINDOWS 87
- Power Window Controls 87
- Wind Buffeting 90

■ COMMANDVIEW SUNROOF WITH POWER SHADE — IF EQUIPPED 90
- Opening Sunroof 91
- Closing Sunroof 92
- Wind Buffeting 92

- Opening Power Shade 92
- Closing Power Shade 93
- Pinch Protect Feature 93
- Sunroof Maintenance 93
- Ignition Off Operation 93

■ HOOD 94
- To Open The Hood 94
- To Close The Hood 94

■ TRUNK 95
- Opening 95
- Closing 96
- Trunk Safety 97
- Cargo Area Features 97

■ LOAD LEVELING SYSTEM — IF EQUIPPED 100

■ GARAGE DOOR OPENER — IF EQUIPPED 100
- Before You Begin Programming HomeLink. 101
- Canadian/Gate Operator Programming 104
- Using HomeLink 105
- Security. 105
- Troubleshooting Tips 105
- General Information 106

■ INTERNAL EQUIPMENT 107
- Storage 107
- Cupholders 109
- Power Sunshade — If Equipped 112
- Electrical Power Outlets 113
- Wireless Charging Pad — If Equipped 116
- Sunglasses Bin Door 117

VEHICLE USER GUIDE — IF EQUIPPED

Access your Owner's Information right through your Uconnect 4C or 4C NAV touchscreen system — If Equipped.

To access the Vehicle User Guide on your Uconnect Touchscreen: Press the Uconnect **Apps** button. From there, press the **Vehicle User Guide** icon on your touchscreen. No Uconnect registration is required.

Uconnect 4C NAV With 8.4–inch Display Vehicle User Guide Touchscreen Icon

NOTE: Vehicle User Guide features are not available while the vehicle is moving. If you try to access while the vehicle is in motion, the system will display: Feature not available while the vehicle is in motion.

Pre-Installed Features

Your User Guide — Updated in real-time	Available when and where you need it
Touchscreen convenience	Customizable interface
Maintenance schedules and information	Multilingual
Comprehensive icon & symbol glossary	

Once you launch your Vehicle User Guide, you will be able to explore your warranty information and radio manual when and where you need them. Your Uconnect system displays the Vehicle User Guide on your touchscreen radio to assist in better understanding your vehicle. There's no app to download, no phone to connect and no external device needed for playback. Plus, it's updated throughout the year, in real-time, so it never goes out of date.

Features/Benefits

- Pre-installed on your Uconnect touchscreen radio
- Enhanced search and browsing capability
- Robust NAV application — If Equipped
- Add selected topics to a fast-access Favorites category
- Icon and symbol glossary
- Warranty information
- Crucial driver information and assistance:

Operating Instructions	Maintenance Schedules
Warranty Information	Emergency Procedures
Fluid Level Standards	911 Contact and More

Tip: When viewing a topic, tap the star icon to add it to your Favorites, for easy access in the future.

KEYS

Key Fob

Your vehicle uses a keyless ignition system. The ignition system consists of a key fob with Remote Keyless Entry (RKE) and a START/STOP push button ignition system. The Remote Keyless Entry system consists of a key fob and Keyless Enter-N-Go feature if equipped.

NOTE: The key fob may not be found if it is located next to a mobile phone, laptop or other electronic device; these devices may block the key fob's wireless signal.

The key fob allows you to lock or unlock the doors and trunk from distances up to approximately 66 feet (20 m) using a handheld key fob. The key fob does not need to be pointed at the vehicle to activate the system.

NOTE: In the ON/RUN position, key fob commands are disabled if the vehicle is at or above 5 mph (8 km/h).

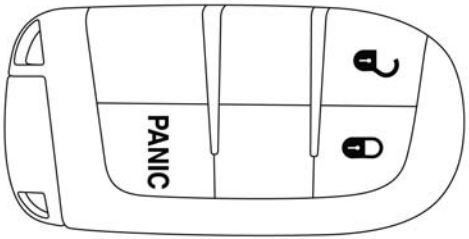

0301115708US

Key Fob

The key fob also contains an emergency key, which is stored in the rear of the key fob.

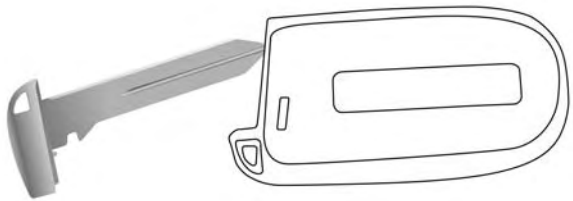

Emergency Key

The emergency key allows for entry into the vehicle should the battery in the vehicle or the key fob go dead. The emergency key is also for locking/unlocking the glove compartment. You can keep the emergency key with you when valet parking.

To remove the emergency key, slide the mechanical release button on the back of the key fob sideways with your thumb and then pull the key out with your other hand.

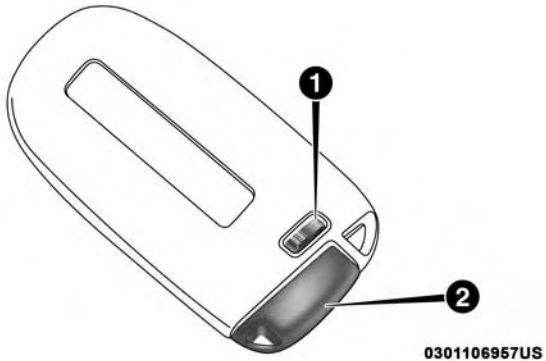

Emergency Key Removal Process

1 — Mechanical Release Button
2 — Emergency Key

In case the ignition switch does not change with the push of a button, the key fob may have a low or fully depleted battery. A low key fob battery can be verified by referring to the instrument cluster, which will display directions to follow.

NOTE: In a situation of a low or fully depleted battery, a backup method can be used to operate the ignition switch. Put the nose side of the key fob (side opposite of the Emergency Key) against the ENGINE START/STOP button and push to operate the ignition switch.

To Unlock The Doors

Push and release the unlock button on the key fob once to unlock the driver's door or twice within five seconds to unlock all doors.

The turn signal lights will flash to acknowledge the unlock signal. The illuminated entry system will also be activated.

NOTE: All door unlock settings can be programmed to your convenience through Uconnect Settings. Refer to "Uconnect Settings" in "Multimedia" for further information.

- Unlock the driver door on the first push of the key fob unlock button.
- Unlock all doors on the first push of the key fob unlock button.

NOTE: To unlock doors and trunk with passive entry, refer to "Keyless Enter-N-Go — Passive Entry" located in "Doors" in "Getting To Know Your Vehicle" for further information.

NOTE: When you use the key fob to open any door, the courtesy lights, overhead lights, and approach lighting in the outside mirrors (if equipped) will turn on. Refer to "Interior Lights" in "Getting To Know Your Vehicle" for further information.

1st Press Of Key Fob Unlocks

This feature lets you program the system to unlock either the driver's door or all doors on the first push of the unlock button on the key fob.

To change the current setting, refer to "Uconnect Settings" in "Multimedia" for further information.

Flash Lights With Lock

This feature will cause the turn signal lights to flash when the doors are locked with the key fob. This feature can be turned on or turned off. To change the current setting, refer to "Uconnect Settings" in "Multimedia" for further information.

Headlight Illumination On Approach

This feature activates the headlights for up to 90 seconds when the doors are unlocked with the key fob. The time for this feature is programmable, on vehicles equipped, through Uconnect Settings. To change the current setting, refer to "Uconnect Settings" in "Multimedia" for further information.

To Unlatch The Trunk

Push the trunk button on the key fob two times within five seconds to unlatch the trunk.

If the vehicle is equipped with Passive Entry, refer to "Keyless Enter-N-Go — Passive Entry" under "Getting To Know Your Vehicle" for further information.

To Lock The Doors And Trunk

Push and release the lock button on the key fob to lock all doors.

The turn signal lights will flash and the horn will chirp to acknowledge the signal if programmed. Refer to "Uconnect Settings" in "Multimedia" for further programmable information.

NOTE: To lock the doors with passive entry, Refer to "Keyless Enter-N-Go — Passive Entry" located in "Doors" in "Getting To Know Your Vehicle" for further information.

If one or more doors are open, or the trunk is open, the doors will lock. The doors will unlock automatically if the key fob is left inside the passenger compartment, otherwise the doors will stay locked.

Sound Horn With Lock

This feature will cause the horn to chirp when the doors are locked with the key fob. This feature can be turned on or turned off. To change the current setting, refer to "Uconnect Settings" in "Multimedia" for further information.

Using The Panic Alarm

To turn the Panic Alarm feature on or off, push the Panic button on the key fob. When the Panic Alarm is activated, the turn signals will flash, the horn will pulse on and off, and the interior lights will turn on.

The Panic Alarm will stay on for three minutes unless you turn it off by either pushing the Panic button a second time or drive the vehicle at a speed of 15 mph (24 km/h) or greater.

NOTE:

- The interior lights will turn off if you place the ignition in the ACC or ON/RUN position while the Panic Alarm is activated. However, the exterior lights and horn will remain on.
- You may need to be less than 35 ft (11 m) from the vehicle when using the key fob to turn off the Panic Alarm due to the radio frequency noises emitted by the system.

Key Fob Battery Replacement

The recommended replacement battery is one CR2032 battery.

NOTE:

- Perchlorate Material — special handling may apply. See www.dtsc.ca.gov/hazardouswaste/perchlorate for further information.
- Do not touch the battery terminals that are on the back housing or the printed circuit board.

1. Remove the emergency key by sliding the mechanical latch on the back of the key fob sideways with your thumb and then pull the emergency key out with your other hand.

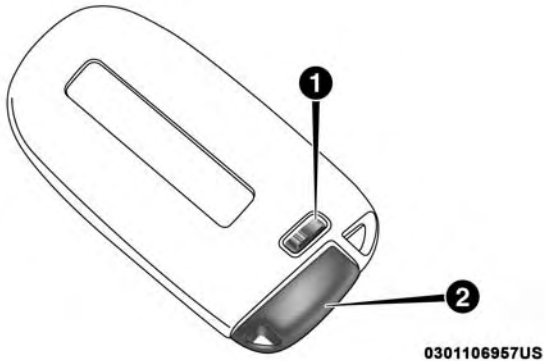

Emergency Key Removal

1 — Emergency Key Release Button
2 — Emergency Key

2. Separate the key fob halves using the tip of the emergency key, a #2 flat blade screwdriver, or a coin and gently pry the two halves of the key fob apart. Make sure not to damage the seal during removal.

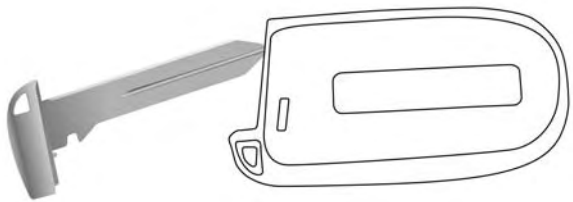

0301101915NA

Emergency Key Removal

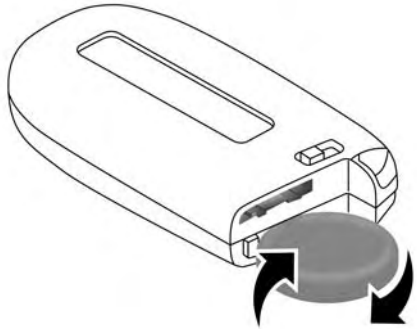

0301101916NA

Separating Case With A Coin

NOTE: Separating the case can also be done with a key blade or a flat head screwdriver.

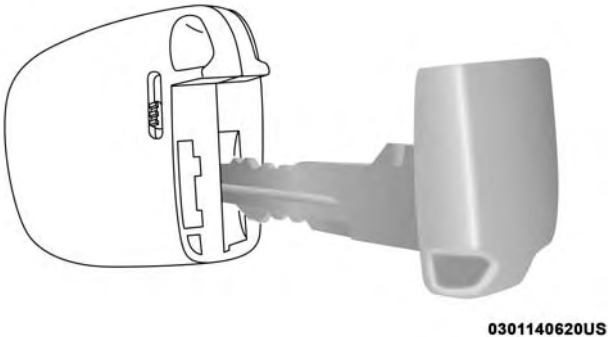

Separating Case With A Key Blade

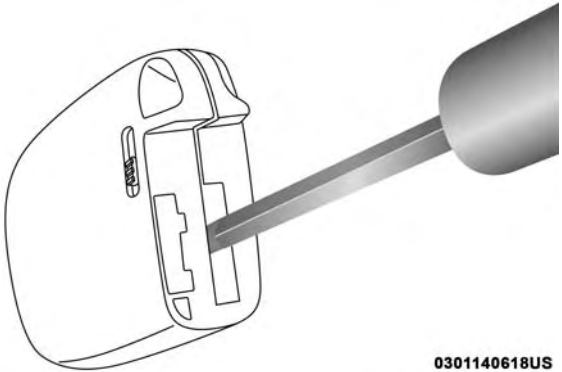

Separating Case With A Flat Blade Screwdriver

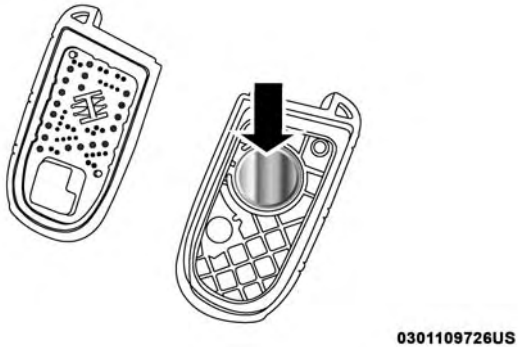

Key Fob Battery Replacement

3. Remove the battery by turning the back cover over (battery facing downward) and tapping it lightly on a solid surface such as a table or similar surface, and then replace the battery. When replacing the battery, match the + sign on the battery to the + sign on the inside of the battery clip, located on the back cover. Avoid touching the new battery with your fingers because skin oils may cause battery deterioration. If you touch a battery, clean it with rubbing alcohol.
4. To assemble the key fob case, snap the two halves together.

Programming Additional Key Fobs

Programming the key fob may be performed by an authorized dealer.

NOTE: Once a key fob is programmed to a vehicle, it cannot be repurposed and reprogrammed to another vehicle.

Request For Additional Remote Controls

NOTE: Only key fobs that are programmed to the vehicle electronics can be used to start and operate the vehicle. Once a key fob is programmed to a vehicle, it cannot be programmed to any other vehicle.

WARNING!

- **Always remove the key fobs from the vehicle and lock all doors when leaving the vehicle unattended.**
- **For vehicles equipped with Keyless Enter-N-Go — Ignition, always remember to place the ignition in the OFF mode.**

Duplication of key fobs may be performed at an authorized dealer. This procedure consists of programming a blank key fob to the vehicle electronics. A blank key fob is one that has never been programmed.

NOTE: When having the Sentry Key Immobilizer System serviced, bring all vehicle keys with you to an authorized dealer.

General Information

The following regulatory statement applies to all radio frequency (RF) devices equipped in this vehicle:

This device complies with Part 15 of the FCC Rules and with Industry Canada license-exempt RSS standard(s). Operation is subject to the following two conditions:

1. This device may not cause harmful interference, and
2. This device must accept any interference received, including interference that may cause undesired operation.

NOTE: Changes or modifications not expressly approved by the party responsible for compliance could void the user's authority to operate the equipment.

IGNITION SWITCH

Keyless Push Button Ignition

This feature allows the driver to operate the ignition with the push of a button as long as the key fob is in the passenger compartment.

The Keyless Push Button Ignition has four operating positions, three of which are labeled and will illuminate when in position. The three positions are OFF, ACC, and ON/RUN. The fourth position is START. During start, ON/RUN will illuminate.

NOTE: If the ignition switch does not change with the push of a button, the key fob may have a low or dead battery. In this situation, a back up method can be used to operate the ignition switch. Put the nose side (side opposite of the emergency key) of the key fob against the ENGINE START/STOP button and push to operate the ignition switch.

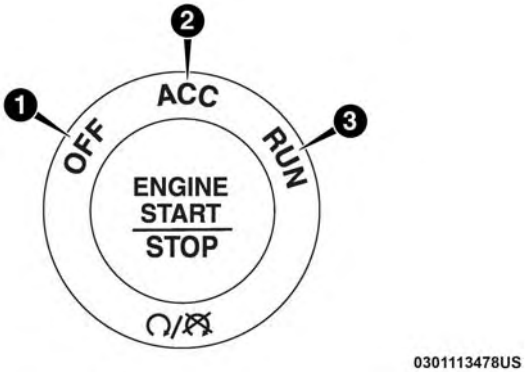

START/STOP Ignition Button

1 — OFF
2 — ACC
3 — ON/RUN

The push button ignition can be placed in the following modes:

OFF

- The engine is stopped.
- Some electrical devices (e.g. central locking, alarm, etc.) are still available.

ACC

- Engine is not started.
- Some electrical devices are available.

ON/RUN

- Driving position.
- All the electrical devices are available.

START

- The engine will start.

WARNING!

- **When exiting the vehicle, always remove the key fob from the vehicle and lock your vehicle.**
- **Never leave children alone in a vehicle, or with access to an unlocked vehicle.**
- **Allowing children to be in a vehicle unattended is dangerous for a number of reasons. A child or others could be seriously or fatally injured. Children should be warned not to touch the parking brake, brake pedal or the gear selector.**

(Continued)

WARNING! ***(Continued)***

- **Do not leave the key fob in or near the vehicle, or in a location accessible to children, and do not leave the ignition of a vehicle equipped with Keyless Enter-N-Go in the ON/RUN mode. A child could operate power windows, other controls, or move the vehicle.**
- **Do not leave children or animals inside parked vehicles in hot weather. Interior heat build-up may cause serious injury or death.**

CAUTION!

An unlocked vehicle is an invitation for thieves. Always remove key fob from the vehicle and lock all doors when leaving the vehicle unattended.

NOTE: Refer to "Starting The Engine," in "Starting And Operating" for further information.

Vehicle On Message

When opening the driver's door and the ignition is in ON/RUN (engine not running) position, a chime will sound to remind you to place the ignition in the OFF position.

In addition to the chime, the Vehicle On message will display in the cluster (if equipped).

NOTE: The power window switches and power sunroof (if equipped) will remain active for three minutes after the ignition is cycled to the OFF position. Opening either front door will cancel this feature. The time for this feature is programmable.

WARNING!

- **Before exiting a vehicle, always come to a complete stop, then shift the automatic transmission into PARK, apply the parking brake, place the engine in the OFF position, remove the key fob from the vehicle and lock your vehicle. If equipped with Keyless Enter-N-Go, always make sure the keyless ignition is in "OFF" position, remove the key fob from the vehicle and lock the vehicle.**
- **Never leave children alone in a vehicle, or with access to an unlocked vehicle.**

(Continued)

WARNING! *(Continued)*

- **Allowing children to be in a vehicle unattended is dangerous for a number of reasons. A child or others could be seriously or fatally injured. Children should be warned not to touch the parking brake, brake pedal or the gear selector.**
- **Do not leave the key fob in or near the vehicle, or in a location accessible to children, and do not leave the ignition of a vehicle equipped with Keyless Enter-N-Go in the ON/RUN mode. A child could operate power windows, other controls, or move the vehicle.**
- **Do not leave children or animals inside parked vehicles in hot weather. Interior heat build-up may cause serious injury or death.**

CAUTION!

An unlocked vehicle is an invitation for thieves. Always remove key fob from the vehicle and lock all doors when leaving the vehicle unattended.

REMOTE START — IF EQUIPPED

How To Use Remote Start — If Equipped

Push remote start button on the key fob twice within five seconds. Pushing the remote start button a third time shuts the engine off.

To drive the vehicle, push the unlock button, and push the ignition to the ON/RUN position.

NOTE:

- With remote start, the engine will only run for 15 minutes (timeout) unless the ignition is placed in the ON/RUN position.
- The vehicle must be started with the key after two consecutive timeouts.

All of the following conditions must be met before the engine will remote start:

- Gear selector in PARK
- Doors closed
- Hood closed
- Trunk closed

- Hazard switch off
- Brake switch inactive (brake pedal not pushed)
- Battery at an acceptable charge level
- Check engine light shall not be present
- PANIC button not pushed
- System not disabled from previous remote start event
- Vehicle alarm system indicator flashing
- Ignition in STOP/OFF position
- Fuel level meets minimum requirement
- Vehicle Security Alarm is not signaling an intrusion

WARNING!

- **Do not start or run an engine in a closed garage or confined area. Exhaust gas contains Carbon Monoxide (CO) which is odorless and colorless. Carbon Monoxide is poisonous and can cause serious injury or death when inhaled.**
- **Keep key fobs away from children. Operation of the Remote Start System, windows, door locks or other controls could cause serious injury or death.**

Remote Start Abort Message On The Instrument Cluster Display — If Equipped

The following messages will display in the instrument cluster display if the vehicle fails to remote start or exits remote start prematurely:

- Remote Start Aborted — Door Open
- Remote Start Aborted — Hood Open
- Remote Start Aborted — Fuel Low
- Remote Start Aborted — Trunk Open
- Remote Start Disabled — Start Vehicle To Reset
- Remote Start Aborted — Too Cold
- Remote Start Aborted — Time Expired

The message will stay active until the ignition is turned to the ON/RUN position.

To Enter Remote Start Mode

Push and release the remote start button on the key fob twice within five seconds. The vehicle doors will lock, the parking lights will flash, and the horn will chirp twice (if programmed). Then, the engine will start, and the vehicle will remain in the Remote Start mode for a 15-minute cycle.

NOTE:

- If an engine fault is present or fuel level is low, the vehicle will start and then shut down in 10 seconds.
- The park lamps will turn on and remain on during Remote Start mode.
- For security, power window and power sunroof operation (if equipped) are disabled when the vehicle is in the Remote Start mode.
- The engine can be started two consecutive times with the key fob. However, the ignition must be cycled by pushing the START/STOP button twice (or the ignition switch must be cycled to the ON/RUN position) before you can repeat the start sequence for a third cycle.

To Exit Remote Start Mode Without Driving The Vehicle

Push and release the remote start button one time or allow the engine to run for the entire 15-minute cycle.

NOTE: To avoid unintentional shutdowns, the system will disable with a one time push of the remote start button for two seconds after receiving a valid remote start request.

To Exit Remote Start Mode And Drive The Vehicle

Before the end of 15-minute cycle, push and release the unlock button on the key fob to unlock the doors and disarm the vehicle security alarm (if equipped). Then, prior to the end of the 15-minute cycle, push and release the START/STOP button. If the START/STOP button is not present, insert the key fob into the ignition switch and turn the switch to the ON/RUN position.

NOTE:

- For vehicles not equipped with the Keyless Enter-N-Go — Passive Entry feature, the ignition switch must be in the ON/RUN position in order to drive the vehicle.
- For vehicles not equipped with the Keyless Enter-N-Go — Passive Entry feature, the message “Remote Start Active — Insert Key and Turn To Run” will show in the instrument cluster display until you insert the key.
- For vehicles equipped with the Keyless Enter-N-Go — Passive Entry feature, the message “Remote Start Active — Push Start Button” will show in the instrument cluster display until you push the START button.

To Cancel Remote Start

Remote Starting will also cancel if any of the following occur:

- The engine stalls or engine speed exceeds 2500 rpm.
- Any engine warning lights come on.
- Low Fuel Light turns on.
- The hood is opened.
- The hazard switch is pushed.
- The gear selector is moved out of PARK.
- The brake pedal is pushed.

Remote Start Comfort Systems — If Equipped

When remote start is activated, the heated steering wheel and driver heated seat features will automatically turn on in cold weather. In warm weather, the driver vented seat feature will automatically turn on when the remote start is activated. These features will stay on through the duration of remote start or until the ignition switch is cycled to the ON/RUN position.

General Information

The following regulatory statement applies to all radio frequency (RF) devices equipped in this vehicle:

This device complies with Part 15 of the FCC Rules and with Industry Canada license-exempt RSS standard(s). Operation is subject to the following two conditions:

1. This device may not cause harmful interference, and
2. This device must accept any interference received, including interference that may cause undesired operation.

NOTE: Changes or modifications not expressly approved by the party responsible for compliance could void the user's authority to operate the equipment.

SENTRY KEY

The Sentry Key Immobilizer system prevents unauthorized vehicle operation by disabling the engine. The system does not need to be armed or activated. Operation is automatic, regardless of whether the vehicle is locked or unlocked.

The system uses a key fob, keyless push button ignition and a RF receiver to prevent unauthorized vehicle operation. Therefore, only key fobs that are programmed to the vehicle can be used to start and operate the vehicle. The system cannot reprogram a key fob obtained from another vehicle.

After turning the ignition switch to the ON/RUN position, the vehicle security light will turn on for three seconds for a bulb check. If the light remains on after the bulb check, it indicates that there is a problem with the electronics. In addition, if the light begins to flash after the bulb check, it indicates that someone attempted to start the engine with an invalid key fob. In the event that a valid key fob is used to start the engine but there is an issue with the vehicle electronics, the engine will start and shut off after two seconds.

If the vehicle security light turns on during normal vehicle operation (vehicle running for longer than ten seconds), it indicates that there is a fault in the electronics. Should this occur, have the vehicle serviced as soon as possible by an authorized dealer.

CAUTION!

The Sentry Key Immobilizer system is not compatible with some aftermarket remote starting systems. Use of these systems may result in vehicle starting problems and loss of security protection.

All of the key fobs provided with your new vehicle have been programmed to the vehicle electronics.

Key Programming

Programming key fobs may be performed at an authorized dealer.

Replacement Keys

NOTE: Only key fobs that are programmed to the vehicle electronics can be used to start and operate the vehicle. Once a key fob is programmed to a vehicle, it cannot be programmed to any other vehicle.

CAUTION!

- **Always remove the key fobs from the vehicle and lock all doors when leaving the vehicle unattended.**

(Continued)

CAUTION! *(Continued)*

- **For vehicles equipped with Keyless Enter-N-Go — Ignition, always remember to place the ignition in the OFF position.**

NOTE: Duplication of key fobs may be performed at an authorized dealer. This procedure consists of programming a blank key fob to the vehicle electronics. A blank key fob is one that has never been programmed.

When having the Sentry Key Immobilizer System serviced, bring all vehicle keys with you to an authorized dealer.

General Information

The following regulatory statement applies to all radio frequency (RF) devices equipped in this vehicle:

This device complies with Part 15 of the FCC Rules and with Industry Canada license-exempt RSS standard(s). Operation is subject to the following two conditions:

1. This device may not cause harmful interference, and
2. This device must accept any interference received, including interference that may cause undesired operation.

NOTE: Changes or modifications not expressly approved by the party responsible for compliance could void the user's authority to operate the equipment.

VEHICLE SECURITY ALARM — IF EQUIPPED

The vehicle security alarm monitors the vehicle doors for unauthorized entry and the keyless push button ignition for unauthorized operation. While the vehicle security alarm is armed, interior switches for door locks and trunk release are disabled. If something triggers the alarm, the vehicle security alarm will provide the following audible and visible signals: the horn will pulse, the park lamps and/or turn signals will flash, and the vehicle security light in the instrument cluster will flash.

To Arm The System

Follow these steps to arm the vehicle security alarm:

1. Make sure the vehicle's ignition is placed in the OFF mode. Refer to "Ignition Switch" in "Getting To Know Your Vehicle" for further information.
2. Perform one of the following methods to lock the vehicle:
   - Push lock on the interior power door lock switch with the driver and/or passenger door open.

- Push the lock button on the exterior Passive Entry Door Handle with a valid key fob available in the same exterior zone (refer to "Keyless Enter-N-Go — Passive Entry," located in "Doors" in "Getting To Know Your Vehicle" for further information).
- Push the lock button on the key fob.

3. If any doors are open, close them.

NOTE: Security System Manual Override

The vehicle security alarm will not arm if you lock the doors using the manual door lock plunger.

To Disarm The System

The vehicle security alarm can be disarmed using any of the following methods:

- Push the unlock button on the key fob.
- Grasp the Passive Entry Unlock Door Handle, if equipped. Refer to "Keyless Enter-N-Go — Passive Entry," located in "Doors" in "Getting To Know Your Vehicle" for further information.
- Push the Keyless Enter-N-Go ignition button (requires at least one valid key fob in the vehicle).

NOTE:

- The driver's door key cylinder and the trunk button on the key fob cannot arm or disarm the vehicle security alarm.
- When the vehicle security alarm is armed, the interior power door lock switches will not unlock the doors.

The vehicle security alarm is designed to protect your vehicle. However, you can create conditions where the system will give you a false alarm. If one of the previously described arming sequences has occurred, the vehicle security alarm will arm regardless of whether you are in the vehicle or not. If you remain in the vehicle and open a door, the alarm will sound. If this occurs, disarm the vehicle security alarm.

If the vehicle security alarm is armed and the battery becomes disconnected, the vehicle security alarm will remain armed when the battery is reconnected; the exterior lights will flash, the horn will sound. If this occurs, disarm the vehicle security alarm.

Rearming Of The System

If something triggers the alarm, and no action is taken to disarm it, the vehicle security alarm will turn the horn off after 29 seconds, five seconds between cycles, up to eight cycles if the trigger remains active and the vehicle security alarm will rearm itself.

Tamper Alert

If something has triggered the vehicle security alarm in your absence, the horn will sound three times and the exterior lights will blink three times when you disarm the vehicle security alarm. Check the vehicle for tampering.

DOORS

Manual Door Locks

To lock each door, push the door lock knob on each door trim panel downward. To unlock the front doors, pull the inside door handle to the first detent. To unlock the rear doors, pull the door lock knob on the door trim panel upward.

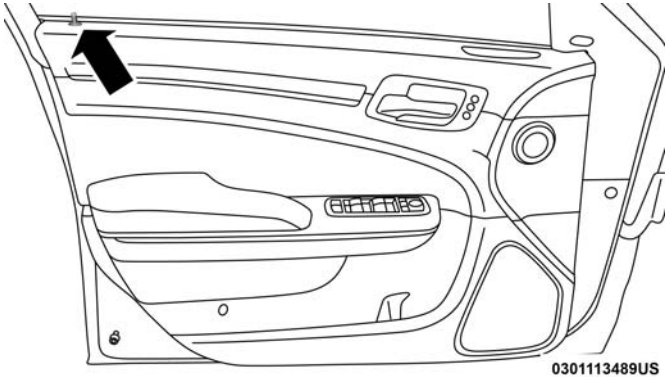

Door Lock Knob

If the door lock knob is down when you shut the door, the door will lock. Therefore, make sure the key fob is not inside the vehicle before closing the door.

WARNING!

- **For personal security and safety in the event of a collision, lock the vehicle doors before you drive as well as when you park and leave the vehicle.**

(Continued)

WARNING! *(Continued)*

- **When exiting the vehicle, always make sure the keyless ignition node is in the OFF mode, remove the key fob from the vehicle and lock your vehicle.**
- **Never leave children alone in a vehicle, or with access to an unlocked vehicle. Allowing children to be in a vehicle unattended is dangerous for a number of reasons. A child or others could be seriously or fatally injured. Children should be warned not to touch the parking brake, brake pedal or the gear selector.**
- **Do not leave the key fob in or near the vehicle, or in a location accessible to children, and do not leave the ignition of a vehicle equipped with Keyless Enter-N-Go in the ACC or ON/RUN mode. A child could operate power windows, other controls, or move the vehicle.**

Power Door Locks

A power door lock switch is on each front door trim panel. Use this switch to lock or unlock the doors.

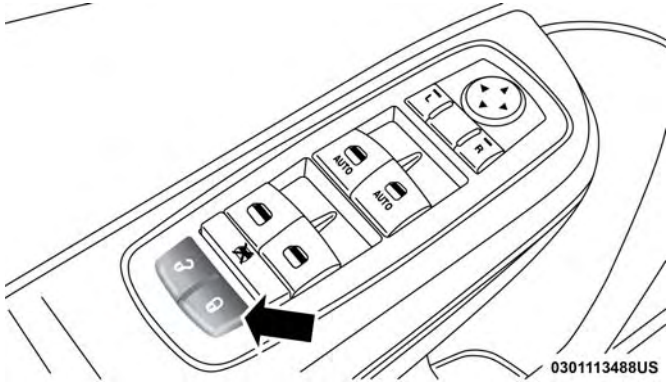

Power Door Lock Switches

The doors can also be locked and unlocked with the Keyless Enter-N-Go — Passive Entry system. Refer to "Keyless Enter-N-Go — Passive Entry" in this section for further information.

If you push the power door lock switch while the ignition is in the ACC or ON/RUN position, and any front door is open, the power locks will not operate. This prevents you from accidentally locking the key fob in the vehicle. Placing the ignition in the OFF position or closing the door will allow the locks to operate. If the driver door is open, and the ignition is in the ACC or ON/RUN position, a chime will sound as a reminder to remove the key fob.

Keyless Enter-N-Go — Passive Entry

The Passive Entry system is an enhancement to the vehicle's Remote Keyless Entry system and a feature of Keyless Enter-N-Go. This feature allows you to lock and unlock the vehicle's door(s) without having to push the key fob lock or unlock buttons.

NOTE:

- Passive Entry may be programmed on or off. Refer to "Uconnect Settings" in "Multimedia" for further information.
- If wearing gloves on your hands, or if it has been raining/snowing on the Passive Entry door handle, the unlock sensitivity can be affected, resulting in a slower response time.
- If the vehicle is unlocked by Passive Entry and no door is opened within 60 seconds, the vehicle will re-lock and arm the security alarm (if equipped).
- The key fob may not be able to be detected by the vehicle passive entry system if it is located next to a mobile phone, laptop or other electronic device; these devices may block the key fob's wireless signal and prevent the passive entry handle from locking/unlocking the vehicle.

To Unlock From The Driver's Side

With a valid Passive Entry key fob within 5 ft (1.5 m) of the driver's door handle, grab the front driver door handle to unlock the driver's door automatically. The interior door panel lock knob will raise when the door is unlocked.

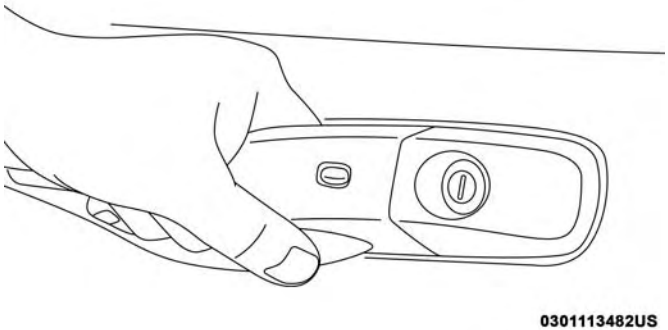

Grab The Door Handle To Unlock

NOTE: If "Unlock All Doors 1st Press" is programmed, all doors will unlock when you grab hold of the front driver's door handle. For further information regarding selecting "Unlock Driver Door 1st Press" and "Unlock All Doors 1st Press," refer to "Uconnect Settings" in "Multimedia".

To Unlock From The Passenger Side

With a valid Passive Entry key fob within 5 ft (1.5 m) of the passenger door handle, grab the front passenger door handle to unlock all four doors automatically. The interior door panel lock knob will raise when the door is unlocked.

NOTE: All doors will unlock when the front passenger door handle is grabbed, regardless of the driver's door unlock preference setting ("Unlock Driver Door 1st Press" or "Unlock All Doors 1st Press").

Preventing Inadvertent Locking Of Passive Entry Key Fob In Vehicle

To minimize the possibility of unintentionally locking a Passive Entry key fob inside your vehicle, the Passive Entry system is equipped with an automatic door unlock feature which will function if the ignition switch is in the OFF position.

FOBIK-Safe only executes in vehicles with passive entry. There are three situations that trigger a FOBIK-Safe search in any passive entry vehicle.

1. A lock request is made by a valid Passive Entry key fob while a door is open.
2. A lock request is made by the Passive Entry door handle while a door is open.
3. A lock request is made by the door panel switch while the door is open.

When any of these situations occur, after all open doors are shut, the FOBIK-Safe search will be executed. If it finds a Passive Entry key fob inside the car and it does not find any Passive Entry key fobs outside the car, then the car will unlock and alert the customer.

NOTE: The vehicle will only unlock the doors when a valid Passive Entry key fob is detected inside the vehicle, and no valid Passive Entry key fob is detected outside the vehicle. The vehicle will not unlock the doors when any of the following conditions are true:

- The doors are locked manually using the door lock knobs.
- There is a valid Passive Entry key fob outside the vehicle and within 5 ft (1.5 m) of either Passive Entry door handle.
- Three attempts are made to lock the doors using the door panel switch and then close the doors.

To Enter The Trunk

With a valid Passive Entry key fob within 5 ft (1.5 m) of the deck lid, push the button on the right side of CHMSL (Center High Mounted Stop Light), which is located on the deck lid.

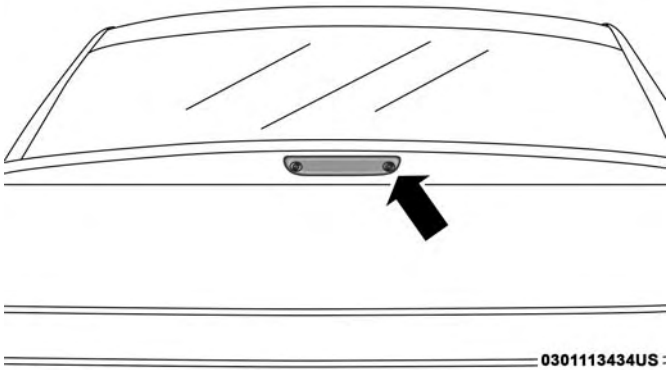

Trunk Passive Entry Button

NOTE: If you inadvertently leave your vehicle's Passive Entry key fob in the trunk and try to close the deck lid, the deck lid will automatically unlatch, unless another one of the vehicle's Passive Entry key fobs is outside the vehicle and within 5 ft (1.5 m) of the deck lid.

To Lock The Vehicle's Doors

With one of the vehicle's Passive Entry key fobs within 5 ft (1.5 m) of the driver or passenger front door handles, push the door handle lock button to lock all four doors.

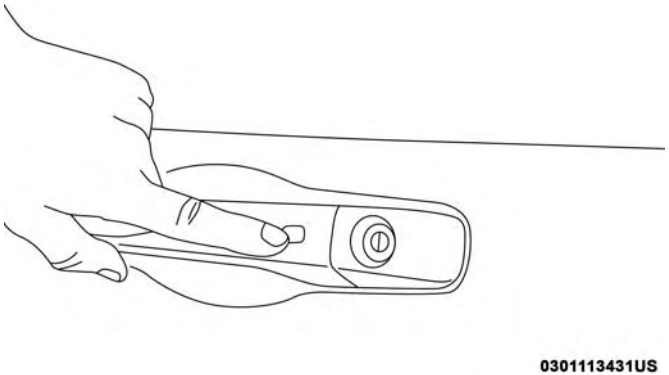

Push The Door Handle Button To Lock

Do NOT grab the door handle when pushing the door handle lock button. This could unlock the door(s).

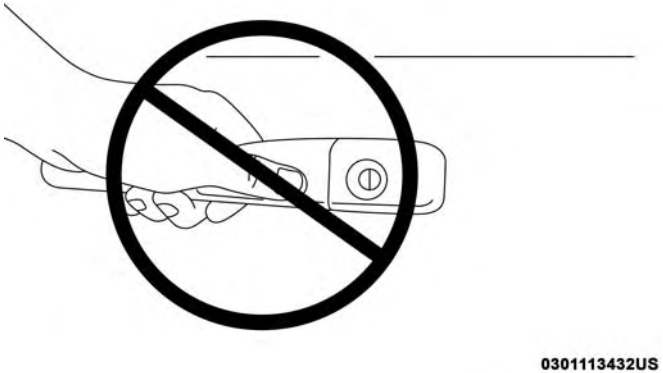

Do NOT Grab The Door Handle When Locking

NOTE:

- After pushing the door handle button, you must wait two seconds before you can lock or unlock the doors, using either Passive Entry door handle. This is done to allow you to check if the vehicle is locked by pulling the door handle, without the vehicle reacting and unlocking.
- The Passive Entry system will not operate if the key fob battery is dead.

The vehicle doors can also be locked by using the key fob lock button or the lock button located on the vehicle's interior door panel.

General Information

The following regulatory statement applies to all radio frequency (RF) devices equipped in this vehicle:

This device complies with Part 15 of the FCC Rules and with Industry Canada license-exempt RSS standard(s). Operation is subject to the following two conditions:

1. This device may not cause harmful interference, and
2. This device must accept any interference received, including interference that may cause undesired operation.

NOTE: Changes or modifications not expressly approved by the party responsible for compliance could void the user's authority to operate the equipment.

Automatic Unlock Doors On Exit

The doors will unlock automatically on vehicles with power door locks if:

1. The Automatic Unlock Doors On Exit feature is enabled.

2. The vehicle was in motion, then speed returned to 0 mph (0 km/h) and the transmission is placed in PARK.
3. The driver door is opened.
4. The doors were not previously unlocked.

NOTE: Automatic Unlock Doors On Exit Programming

To change the current setting, refer to "Uconnect Settings" in "Multimedia" for further information.

Use the Automatic Unlock Doors On Exit feature in accordance with local laws.

Automatic Door Locks — If Equipped

The auto door lock feature default condition is enabled. When enabled, the door locks will lock automatically when the vehicle's speed exceeds 15 mph (24 km/h). The auto door lock feature can be enabled or disabled by an authorized dealer per written request of the customer. Please see an authorized dealer for service.

Child-Protection Door Lock System — Rear Doors

To provide a safer environment for small children riding in the rear seats, the rear doors are equipped with Child-Protection Door Lock system.

To Engage Or Disengage The Child-Protection Door Lock System

1. Open the rear door.
2. Insert the tip of the emergency key into the lock and rotate to the lock or unlock position.
3. Repeat steps one and two for the opposite rear door.

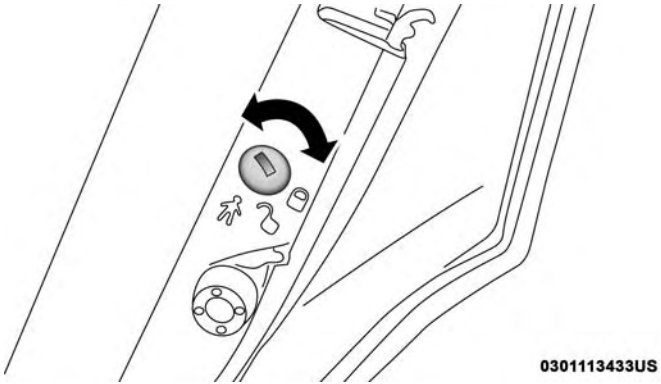

Child-Protection Door Lock Function

WARNING!

Avoid trapping anyone in a vehicle in a collision. Remember that the rear doors can only be opened from the outside with the Child-Protection locks are engaged (locked).

NOTE: For emergency exit from the rear seats when the Child-Protection Door Lock System is engaged, manually raise the door lock knob to the unlocked position, roll down the window, and open the door using the outside door handle.

SEATS

Seats are a part of the Occupant Restraint System of the vehicle.

WARNING!

- **It is dangerous to ride in a cargo area, inside or outside of a vehicle. In a collision, people riding in these areas are more likely to be seriously injured or killed.**
- **Do not allow people to ride in any area of your vehicle that is not equipped with seats and seat belts. In a collision, people riding in these areas are more likely to be seriously injured or killed.**
- **Be sure everyone in your vehicle is in a seat and using a seat belt properly.**

Manual Adjustment (Rear Seats)

Folding Rear Seat

The rear seatbacks can be folded forward to provide an additional storage area. To fold the rear seatback, pull on the loops located on the upper seatback.

NOTE: These loops can be tucked away when not in use.

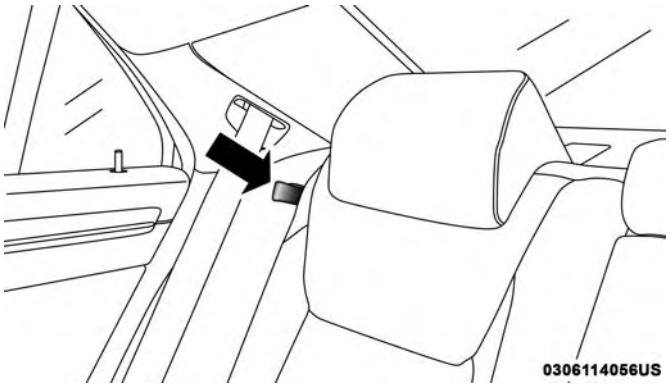

Rear Seatback Loop

After releasing the seatback, it can be folded forward.

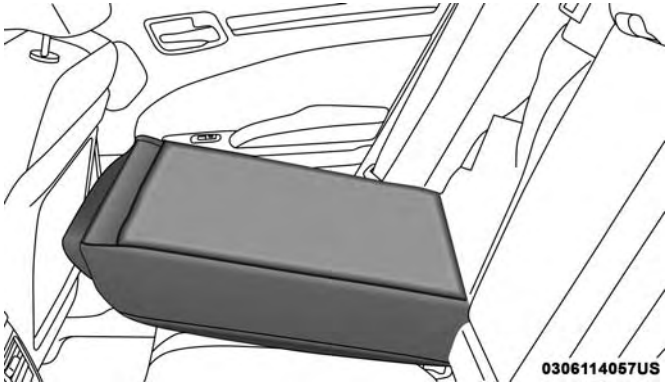

Folded Rear Seatback

NOTE: You may experience deformation in the seat cushion from the seat belt buckles if the seats are left folded for an extended period of time. This is normal and by simply opening the seats to the open position, over time the seat cushion will return to its normal shape.

When the seatback is folded to the upright position, make sure it is latched by strongly pulling on the top of the seatback above the seat strap.

WARNING!

- **Be certain that the seatback is securely locked into position. If the seatback is not securely locked into position, the seat will not provide the proper stability for child seats and/or passengers. An improperly latched seat could cause serious injury.**
- **The cargo area in the rear of the vehicle (with the rear seatbacks in the locked-up or folded down position) should not be used as a play area by children when the vehicle is in motion. They could be seriously injured in a collision. Children should be seated and using the proper restraint system.**

Power Front Seats

On models equipped with power seats, the switches are located on the outboard side of the seat near the floor. Use these switches to move the driver's seat up, down, forward, rearward or to recline the seatback.

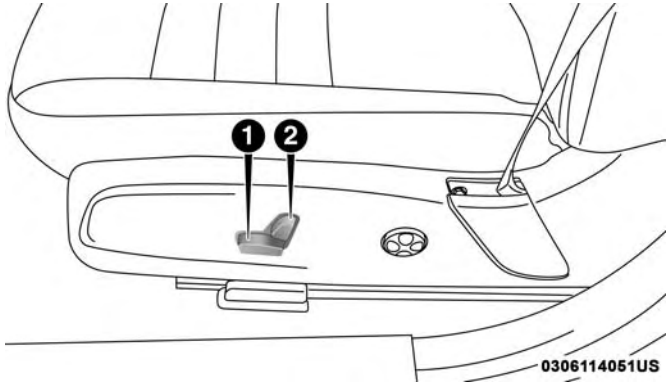

Power Seat Switches

1 — Seat Control
2 — Seatback Control — If Equipped

WARNING!

- **Adjusting a seat while driving may be dangerous. Moving a seat while driving could result in loss of control which could cause a collision and serious injury or death.**

(Continued)

WARNING! *(Continued)*

- **Seats should be adjusted before fastening the seat belts and while the vehicle is parked. Serious injury or death could result from a poorly adjusted seat belt.**
- **Do not ride with the seatback reclined so that the shoulder belt is no longer resting against your chest. In a collision you could slide under the seat belt, which could result in serious injury or death.**

CAUTION!

Do not place any article under a power seat or impede its ability to move as it may cause damage to the seat controls. Seat travel may become limited if movement is stopped by an obstruction in the seat's path.

Adjusting The Seat Forward Or Rearward

The seat can be adjusted both forward and rearward. Push the seat switch forward or rearward. The seat will move in the direction of the switch. Release the switch when the desired position has been reached.

Adjusting The Seat Up Or Down

The height of the seats can be adjusted up or down. Pull upward or push downward on the seat switch; the seat will move in the direction of the switch. Release the switch when the desired position has been reached.

Reclining The Seatback

The angle of the seatback can be adjusted forward or rearward. Push the seatback switch forward or rearward, the seat will move in the direction of the switch. Release the switch when the desired position is reached.

WARNING!

- **Adjusting a seat while driving may be dangerous. Moving a seat while driving could result in loss of control which could cause a collision and serious injury or death.**
- **Seats should be adjusted before fastening the seat belts and while the vehicle is parked. Serious injury or death could result from a poorly adjusted seat belt.**
- **Do not ride with the seatback reclined so that the shoulder belt is no longer resting against your chest. In a collision you could slide under the seat belt, which could result in serious injury or death.**

CAUTION!

Do not place any article under a power seat or impede its ability to move as it may cause damage to the seat controls. Seat travel may become limited if movement is stopped by an obstruction in the seat's path.

Tilting The Seat Up Or Down

The angle of the seat cushion can be adjusted up or down. Pull upward or push downward on the front of the seat switch. The front of the seat cushion will move in the direction of the switch. Release the switch when the desired position has been reached.

Power Lumbar — If Equipped

Vehicles equipped with power driver or passenger seats may also be equipped with power lumbar. The power lumbar switch is located on the outboard side of the power seat. Push the switch forward or rearward to increase or decrease the lumbar support. Push the switch upward or downward to raise or lower the lumbar support.

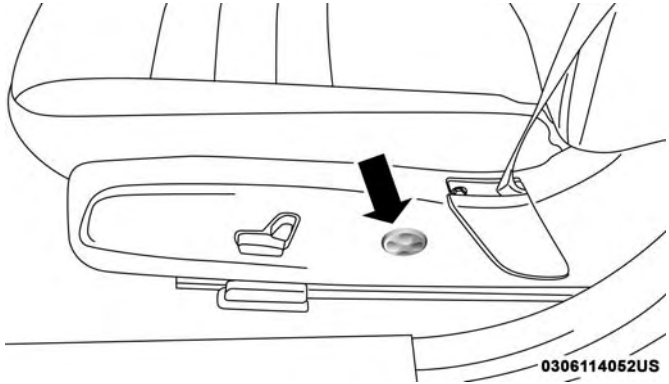

Power Lumbar Switch

Driver Memory Seat — If Equipped

This feature allows the driver to store up to two different memory profiles for easy recall through a memory switch. Each memory profile contains desired position settings for the driver seat, side mirrors, and power tilt and telescopic steering column (if equipped) and a set of desired radio station presets. Your key fob can also be programmed to recall the same positions when the unlock button is pushed.

NOTE: Your vehicle is equipped with two key fobs, one key fob can be linked to memory position 1 and the other key fob can be linked to memory position 2.

The memory seat switch is located on the driver's door trim panel. The switch consists of three buttons:

- The set (S) button, which is used to activate the memory save function.
- The (1) and (2) buttons which are used to recall either of two pre-programmed memory profiles.

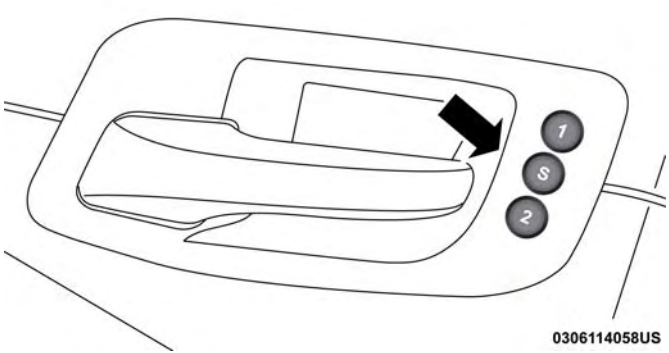

Memory Seat Switch

Programming The Memory Feature

NOTE: To create a new memory profile, perform the following:

1. Cycle the vehicle's ignition to the ON/RUN position (do not start the engine).
2. Adjust all memory profile settings to desired preferences (i.e., seat, side mirror, power tilt and telescopic steering column [if equipped], and radio station presets).
3. Push and release the set (S) button on the memory switch.
4. Within five seconds, push and release either of the memory buttons (1) or (2). The instrument cluster display will display which memory position has been set.

NOTE:

- Memory profiles can be set without the vehicle in PARK, but the vehicle must be in PARK to recall a memory profile.
- To set a memory profile to your key fob, refer to "Linking And Unlinking The Remote Keyless Entry Key Fob To Memory" in this section.

Linking And Unlinking The Remote Keyless Entry Key Fob To Memory

Your key fobs can be programmed to recall one of two pre-programmed memory profiles by pushing the unlock button on the key fob.

NOTE: Before programming your key fobs you must select the "Memory Linked To Fob" feature through the Uconnect system screen. Refer to "Uconnect Settings" in "Multimedia" for further information.

To program your key fobs, perform the following:

1. Cycle the vehicle's ignition to the OFF position.
2. Select a desired memory profile, 1 or 2.

NOTE: If a memory profile has not already been set, refer to "Programming The Memory Feature" in this section for instructions on how to set a memory profile.

3. Once the profile has been recalled, push and release the set (S) button on the memory switch.
4. Within five seconds, push and release button (1) or (2) accordingly. "Memory Profile Set" (1 or 2) will display in the instrument cluster.
5. Push and release the lock button on the key fob within 10 seconds.

NOTE: Your key fobs can be unlinked to your memory settings by pushing the set (S) button, and within 10 seconds, followed by pushing the unlock button on the key fob.

Memory Position Recall

NOTE: The vehicle must be in PARK to recall memory positions. If a recall is attempted when the vehicle is not in PARK, a message will be displayed in the instrument cluster display.

Driver One Memory Position Recall

- To recall the memory settings for driver one using the memory switch, push memory button (1) on the memory switch.
- To recall the memory settings for driver one using the key fob, push the unlock button on the key fob linked to memory position 1.

Driver Two Memory Position Recall

- To recall the memory setting for driver two using the memory switch, push memory button (2) on the memory switch.
- To recall the memory settings for driver two using the key fob, push the unlock button on the key fob linked to memory position 2.

A recall can be canceled by pushing any of the memory buttons during a recall (S, 1, or 2), or by pushing any of the seat adjustment switches. When a recall is canceled, the driver's seat and steering column (if equipped) stop moving. A delay of one second will occur before another recall can be selected.

Easy Entry/Exit Seat

This feature provides automatic driver seat positioning to enhance driver mobility when entering and exiting the vehicle.

The distance the driver seat moves depends on where you have the driver seat positioned when you cycle the vehicle's ignition to the OFF position.

- When you cycle the vehicle's ignition to the OFF position, the driver seat will move about 2.4 inches (60 mm) rearward if the driver seat position is greater than or equal to 2.7 inches (67.7 mm) forward of the rear stop. The seat will return to its previously set position when you cycle the vehicle's ignition to the ACC or RUN position.
- The Easy Entry/Easy Exit feature is disabled when the driver seat position is less than 0.9 of an inch (22.7 mm) forward of the rear stop. At this position, there is no benefit to the driver by moving the seat for Easy Exit or Easy Entry.

Each stored memory setting will have an associated Easy Entry and Easy Exit position.

NOTE: The Easy Entry/Exit feature is not enabled when the vehicle is delivered from the factory. The Easy Entry/Exit feature is enabled (or later disabled) through the programmable features in the Uconnect system. Refer to "Uconnect Settings" in "Multimedia".

Heated Seats — If Equipped

On some models, the front and rear seats may be equipped with heaters located in the seat cushions and seat backs.

WARNING!

- **Persons who are unable to feel pain to the skin because of advanced age, chronic illness, diabetes, spinal cord injury, medication, alcohol use, exhaustion or other physical condition must exercise care when using the seat heater. It may cause burns even at low temperatures, especially if used for long periods of time.**
- **Do not place anything on the seat or seatback that insulates against heat, such as a blanket or cushion. This may cause the seat heater to overheat. Sitting in a seat that has been overheated could cause serious burns due to the increased surface temperature of the seat.**

Front Heated Seats

The front heated seat control buttons are located within the climate or controls screen of the touchscreen.

You can choose from HI, LO, or OFF heat settings. The indicator arrows in touchscreen buttons indicate the level of heat in use. Two indicator arrows will illuminate for HI, and one for LO. Turning the heating elements off will return the user to the radio screen.

- Press the heated seat button once to turn the HI setting on.
- Press the heated seat button a second time to turn the LO setting on.
- Press the heated seat button a third time to turn the heating elements off.

If the HI-level setting is selected, the system will automatically switch to LO-level after approximately 60 minutes of continuous operation. At that time, the display will change from HI to LO, indicating the change. The LO-level setting will turn off automatically after approximately 45 minutes.

NOTE:

- Once a heat setting is selected, heat will be felt within two to five minutes.
- The engine must be running for the heated seats to operate.

Vehicles Equipped With Remote Start

On models that are equipped with remote start, the heated seats can be programmed to come on during a remote start.

This feature can be programmed through the Uconnect system. Refer to "Uconnect Settings" in "Multimedia" for further information.

WARNING!

- **Persons who are unable to feel pain to the skin because of advanced age, chronic illness, diabetes, spinal cord injury, medication, alcohol use, exhaustion or other physical condition must exercise care when using the seat heater. It may cause burns even at low temperatures, especially if used for long periods of time.**
- **Do not place anything on the seat or seatback that insulates against heat, such as a blanket or cushion. This may cause the seat heater to overheat. Sitting in a seat that has been overheated could cause serious burns due to the increased surface temperature of the seat.**

Rear Heated Seats — If Equipped

On some models, the two rear outboard seats may be equipped with heated seats. There are two heated seat switches that allow the rear passengers to operate the seats independently. The heated seat switches for each heater are located on the rear of the center console.

You can choose from HI, LO, or OFF heat settings. Amber indicator lights in each switch indicate the level of heat in use. Two indicator lights will illuminate for HI, one for LO and none for OFF.

- Push the heated seat button once to turn the HI setting on.
- Push the heated seat button a second time to turn the LO setting on.
- Push the heated seat button a third time to turn the heating elements off.

When the HI-level setting is selected, the heater will provide a boosted heat level during the first four minutes of operation. Then, the heat output will drop to the normal HI-level. If the HI-level setting is selected, the system will automatically switch to LO-level after approximately 60 minutes of continuous operation. At that time, the number of indicator lights changes from two to one, indicating the change. The LO-level setting will turn off automatically after approximately 45 minutes.

WARNING!

- **Persons who are unable to feel pain to the skin because of advanced age, chronic illness, diabetes, spinal cord injury, medication, alcohol use, exhaustion or other physical condition must exercise care when using the seat heater. It may cause burns even at low temperatures, especially if used for long periods of time.**
- **Do not place anything on the seat or seatback that insulates against heat, such as a blanket or cushion. This may cause the seat heater to overheat. Sitting in a seat that has been overheated could cause serious burns due to the increased surface temperature of the seat.**

Front Ventilated Seats — If Equipped

Located in the seat cushion and seat back are fans that draw the air from the passenger compartment and move air through fine perforations in the seat cover to help keep the driver and front passenger cooler in higher ambient temperatures. The fans operate at two speeds, HI and LO.

The front ventilated seats control buttons are located within the Uconnect system. You can gain access to the control buttons through the climate screen or the controls screen.

- Press the ventilated seat button once to choose HI.
- Press the ventilated seat button a second time to choose LO.
- Press the ventilated seat button a third time to turn the ventilated seat off.

NOTE: The engine must be running for the ventilated seats to operate.

Vehicles Equipped With Remote Start

On models that are equipped with remote start, the ventilated seats can be programmed to come on during a remote start.

This feature can be programmed through the Uconnect system. Refer to “Uconnect Settings” in “Multimedia” for further information.

HEAD RESTRAINTS

Head restraints are designed to reduce the risk of injury by restricting head movement in the event of a rear-impact. Head restraints should be adjusted so that the top of the head restraint is located above the top of your ear.

WARNING!

- **All occupants, including the driver, should not operate a vehicle or sit in a vehicle's seat until the head restraints are placed in their proper positions in order to minimize the risk of neck injury in the event of a crash.**
- **Head restraints should never be adjusted while the vehicle is in motion. Driving a vehicle with the head restraints improperly adjusted or removed could cause serious injury or death in the event of a collision.**

NOTE: Do not reverse the head restraints (making the rear of the head restraint face forward) in an attempt to gain additional clearance to the back of your head.

Reactive Head Restraints — Front Seats

The front driver and passenger seats are equipped with Reactive Head Restraints (RHR). In the event of a rear impact, the RHR will automatically extend forward minimizing the gap between the back of the occupant's head and the RHR.

The RHR will automatically return to their normal position following a rear impact. If the RHR do not return to their normal position, see an authorized dealer immediately.

To raise the head restraint, pull upward on the head restraint. To lower the head restraint, push the adjustment button located at the base of the head restraint and push downward on the head restraint.

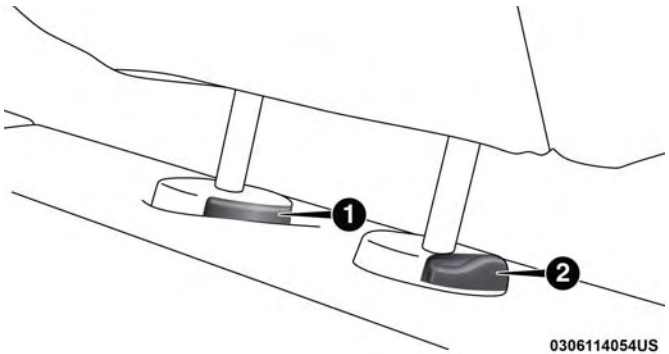

Adjustment Button

1 — Release Button
2 — Adjustment Button

WARNING!

- **A loose head restraint thrown forward in a collision or hard stop could cause serious injury or death to occupants of the vehicle. Always securely stow removed head restraints in a location outside the occupant compartment.**
- **ALL the head restraints MUST be reinstalled in the vehicle to properly protect the occupants. Follow the re-installation instructions above prior to operating the vehicle or occupying a seat.**
- **Do not place items over the top of the Reactive Head Restraint, such as coats, seat covers or portable DVD players. These items may interfere with the operation of the Reactive Head Restraint in the event of a collision and could result in serious injury or death.**

Rear Head Restraints

The center head restraint has two adjustable positions: up or down. When the center seat is being occupied, the head restraint should be in the raised position. When there are no occupants in the center seat, the head restraint can be lowered for maximum visibility for the driver.

To raise the head restraint, pull upward on the head restraint. To lower the head restraint, push the adjustment button located at the base of the head restraint and push downward on the head restraint.

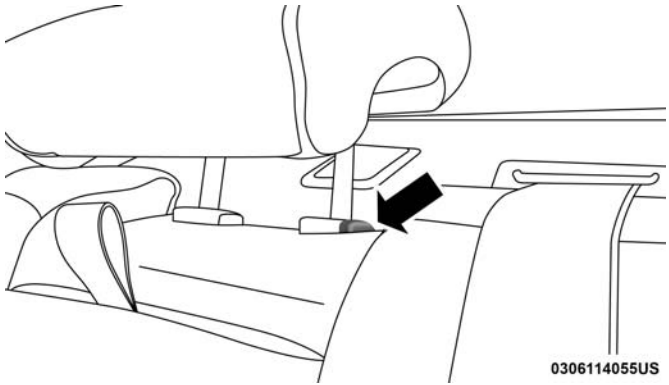

Adjustment Button

NOTE:

- The head restraint should only be removed by qualified technicians, for service purposes only. If the center rear head restraint requires removal, see an authorized dealer.
- The outboard head restraints are not adjustable.

WARNING!

ALL the head restraints MUST be reinstalled in the vehicle to properly protect the occupants. Follow the re-installation instructions above prior to operating the vehicle or occupying a seat.

Front Head Restraint Removal

To remove the head restraint, raise it up as far as it can go. Then, push the adjustment button and the release button at the base of each post while pulling the head restraint up. To reinstall the head restraint, put the head restraint posts into the holes. Then, adjust it to the appropriate height.

NOTE: Do not reposition the head restraint 180 degrees to the incorrect position in an attempt to gain additional clearance to the back of the head.

WARNING!

- **A loose head restraint thrown forward in a collision or hard stop could cause serious injury or death to occupants of the vehicle. Always securely stow removed head restraints in a location outside the occupant compartment.**
- **ALL the head restraints MUST be reinstalled in the vehicle to properly protect the occupants. Follow the re-installation instructions above prior to operating the vehicle or occupying a seat.**

STEERING WHEEL

Manual Tilt/Telescoping Steering Column — If Equipped

This feature allows you to tilt the steering column upward or downward. It also allows you to lengthen or shorten the steering column. The tilt/telescoping lever is located below the steering wheel at the end of the steering column.

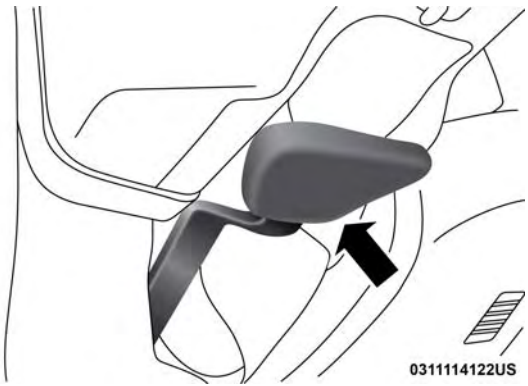

Manual Tilt/Telescoping Control Handle

To unlock the steering column, pull the lever downward. To tilt the steering column, move the steering wheel upward or downward as desired. To lengthen or shorten the steering column, pull the steering wheel outward or push it inward as desired. To lock the steering column in position, push the lever upward until fully engaged.

WARNING!

Do not adjust the steering column while driving. Adjusting the steering column while driving or driving with the steering column unlocked, could cause the driver to lose control of the vehicle. Failure to follow this warning may result in serious injury or death.

Power Tilt/Telescoping Steering Column — If Equipped

This feature allows you to tilt the steering column upward or downward. It also allows you to lengthen or shorten the steering column. The power tilt/telescoping steering column switch is located below the multifunction lever on the steering column.

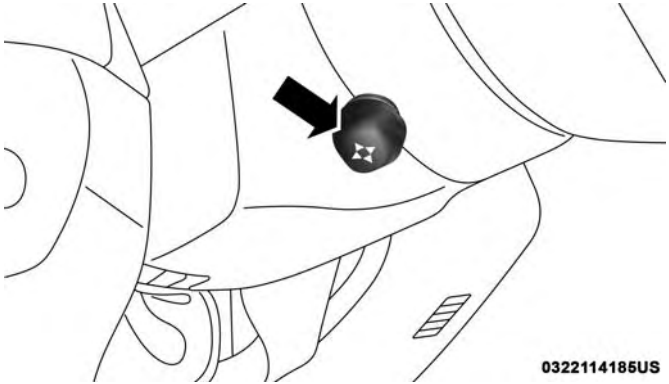

Power Tilt/Telescoping Steering Switch

To tilt the steering column, move the switch up or down as desired. To lengthen or shorten the steering column, pull the switch toward you or push the switch away from you as desired.

NOTE: For vehicles equipped with Driver Memory Seat, you can use your remote keyless entry key fob or the memory switch on the driver's door trim panel to return the tilt/telescopic steering column to pre-programmed positions. Refer to "Driver Memory Seat" in this section.

WARNING!

Do not adjust the steering column while driving. Adjusting the steering column while driving or driving with the steering column unlocked, could cause the driver to lose control of the vehicle. Failure to follow this warning may result in serious injury or death.

Heated Steering Wheel — If Equipped

The steering wheel contains a heating element that helps warm your hands in cold weather. The heated steering wheel has only one temperature setting. Once the heated steering wheel has been turned on, it will stay on for an average of 80 minutes before automatically shutting off. This time will vary based on environmental temperatures. The heated steering wheel can shut off early or may not turn on when the steering wheel is already warm.

The heated steering wheel control button is located within the Uconnect system. You can gain access to the control button through the climate screen or the controls screen.

- Press the heated steering wheel button once to turn the heating element on.
- Press the heated steering wheel button a second time to turn the heating element off.

NOTE: The engine must be running for the heated steering wheel to operate.

Vehicles Equipped With Remote Start

On models that are equipped with remote start, the heated steering wheel can be programmed to come on during a remote start through the Uconnect system. Refer to "Uconnect Settings" in "Multimedia" for further information.

WARNING!

- **Persons who are unable to feel pain to the skin because of advanced age, chronic illness, diabetes, spinal cord injury, medication, alcohol use, exhaustion, or other physical conditions must exercise care when using the steering wheel heater. It may cause burns even at low temperatures, especially if used for long periods.**
- **Do not place anything on the steering wheel that insulates against heat, such as a blanket or steering wheel covers of any type and material. This may cause the steering wheel heater to overheat.**

MIRRORS

Automatic Dimming Mirror — If Equipped

The mirror head can be adjusted up, down, left, and right for various drivers. The mirror should be adjusted to center on the view through the rear window.

This mirror automatically adjusts for headlight glare from vehicles behind you.

NOTE: The Automatic Dimming feature is disabled when the vehicle is in REVERSE to improve rear view viewing.

The Automatic Dimming feature can be turned on or off through the touchscreen.

- Press the mirror dimmer button once to turn the feature on.
- Press the mirror dimmer button a second time to turn the feature off.

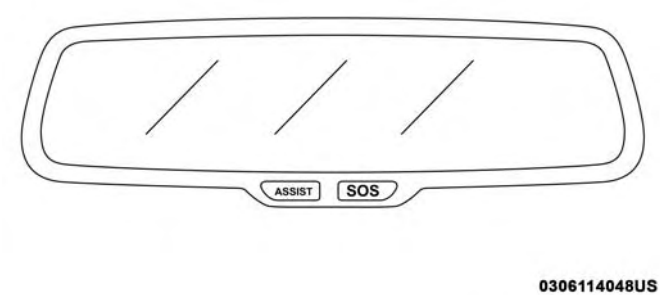

Automatic Dimming Mirror

Refer to "Uconnect Settings" in "Multimedia" for further information.

CAUTION!

To avoid damage to the mirror during cleaning, never spray any cleaning solution directly onto the mirror. Apply the solution onto a clean cloth and wipe the mirror clean.

Outside Mirrors

To receive maximum benefit, adjust the outside mirror(s) to center on the adjacent lane of traffic and a slight overlap of the view obtained from the inside mirror.

NOTE: The passenger side convex outside mirror will give a much wider view to the rear, and especially of the lane next to your vehicle.

WARNING!

Vehicles and other objects seen in an outside convex mirror will look smaller and farther away than they really are. Relying too much on side convex mirrors could cause you to collide with another vehicle or other object. Use your inside mirror when judging the size or distance of a vehicle seen in a side convex mirror.

Driver's Outside Automatic Dimming Mirror — If Equipped

The driver's outside mirror will automatically adjust for glare from vehicles behind you. This feature is controlled by the inside automatic dimming mirror and will automatically adjust for headlight glare when the inside mirror adjusts.

Outside Mirrors With Turn Signal And Approach Lighting — If Equipped

Driver and passenger outside mirrors with turn signal and approach lighting contain four LEDs, which are located in the upper outer corner of each mirror.

Three of the LEDs are turn signal indicators, which flash with the corresponding turn signal lights in the front and rear of the vehicle. Turning on the Hazard Warning flashers will also activate these LEDs.

The fourth LED supplies illuminated entry lighting, which turns on in both mirrors when you use the remote keyless entry key fob or open any door. This LED shines outward to illuminate the front and rear door handles. It also shines downward to illuminate the area in front of the doors.

The illuminated entry lighting fades to off after about 30 seconds or it will fade to off immediately once the ignition is placed into the ON/RUN position.

NOTE: The approach lighting will not function when the gear selector is moved out of the PARK position.

Power Mirrors

The power mirror controls are located on the driver's door trim panel.

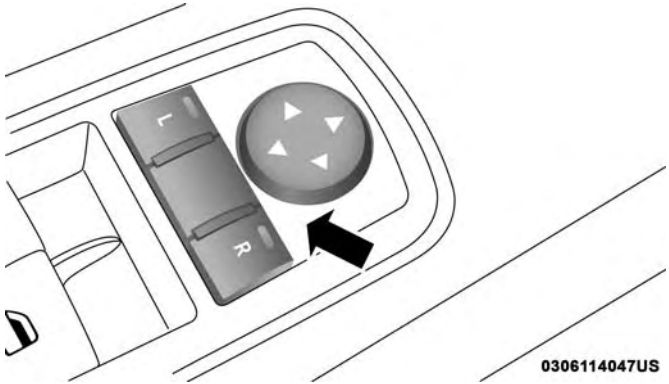

Power Mirror Control

The power mirror controls consist of mirror select buttons and a four-way mirror control switch. To adjust a mirror, push either the L (left) or R (right) button to select the mirror that you want to adjust.

NOTE: A light in the select button will illuminate indicating the mirror is activated and can be adjusted.

Using the mirror control switch, push on any of the four arrows for the direction that you want the mirror to move.

Power mirror preselected positions can be controlled by the optional Memory Seat Feature. Refer to "Driver Memory Seat" in "Getting To Know Your Vehicle" for further information.

Power Folding Outside Mirrors — If Equipped

If equipped with power folding mirrors, they can be electrically folded rearward and unfolded into the drive position.

The switch for the power folding mirrors is located between the power mirror switches L (left) and R (right). Push the switch once and the mirrors will fold in, pushing the switch a second time will return the mirrors to the normal driving position.

If the mirror is manually folded after electrically cycled, a potential extra button push is required to get the mirrors back to the drive position. If the mirror does not electrically fold, check for ice or dirt build up at the pivot area which can cause excessive drag.

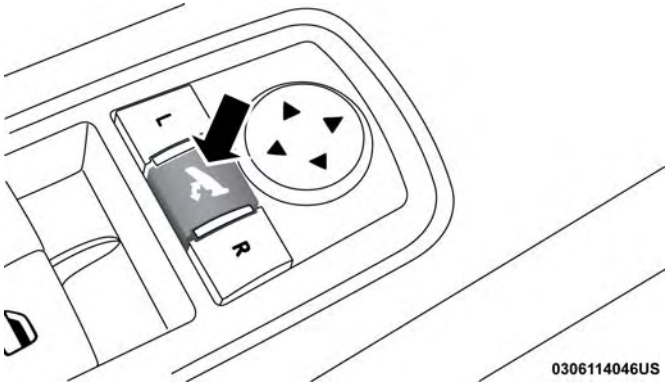

Power Folding Mirror Switch

Automatic Folding Mirrors

When the Automatic Folding Mirrors feature is enabled, the exterior mirrors will fold in when exiting the vehicle (the ignition is OFF, all doors are closed, and the doors are locked).

- If the exterior mirrors were auto-folded, they will unfold when the ignition is turned ON.
- If the exterior mirrors were manually folded, they will not automatically unfold.

NOTE: The Automatic Fold/Unfold Mirrors feature is not turned on when delivered from the factory. The Automatic Fold/Unfold Mirrors feature can be turned on and off using the Uconnect System. Refer to "Uconnect Settings" in "Multimedia" for further information.

Resetting The Power Folding Outside Mirrors

You may need to reset the power folding mirrors if the following occurs:

- The mirrors are accidentally blocked while folding.
- The mirrors are accidentally manually folded/unfolded.
- The mirrors come out of the unfolded position.
- The mirrors shake and vibrate at normal driving speeds.

To reset the power folding mirrors, fold and unfold them by pushing the button (this may require multiple button pushes). This resets them to their normal position.

Heated Mirrors — If Equipped

These mirrors are heated to melt frost or ice. This feature will be activated whenever you turn on the rear window defroster (if equipped). Refer to "Climate Controls" in "Getting To Know Your Vehicle" for further information.

Tilt Side Mirrors In Reverse — If Equipped

Tilt Side Mirrors In Reverse provides automatic outside mirror positioning which will aid the driver's view of the ground rearward of the front doors. The outside mirrors will move slightly downward from the present position when the vehicle is shifted into REVERSE. The outside mirrors will then return to the original position when the vehicle is shifted out of the REVERSE position. Each stored memory setting will have an associated Tilt Side Mirrors In Reverse position.

NOTE: The Tilt Side Mirrors In Reverse feature is not turned on when delivered from the factory. The Tilt Side Mirrors In Reverse feature can be turned on and off using the Uconnect System. Refer to "Uconnect Settings" in "Multimedia" for further information.

Illuminated Vanity Mirrors — If Equipped

An illuminated vanity mirror is located on the sun visor. To use the mirror, rotate the sun visor downward and swing the mirror cover upward. The light turns on automatically. Closing the mirror cover turns off the light.

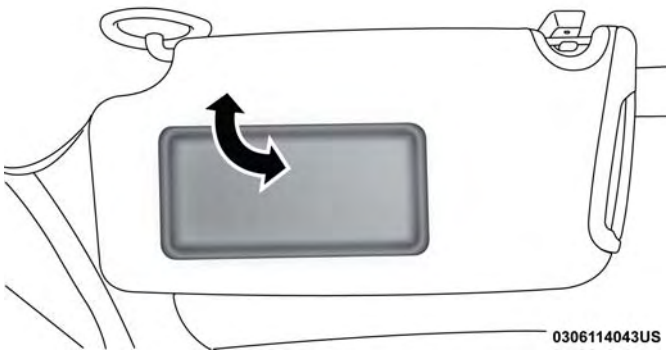

Illuminated Vanity Mirror

"Slide-On-Rod" And Extender Features Of Sun Visor

To use the "Slide-On-Rod" feature of the sun visor, rotate the sun visor downward and swing the sun visor so it is parallel to the side window, grab the sun visor and pull rearwards until the sun visor is in the desired position. To use the extender feature of the sun visor, grab the extender which is located at the rear of the visor and pull rearward.

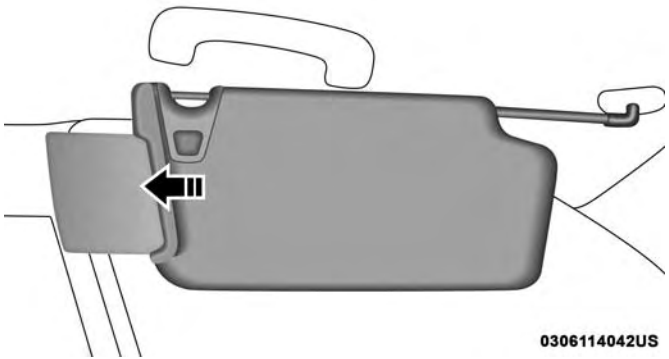

Slide-On-Rod Feature

EXTERIOR LIGHTS

Multifunction Lever

The multifunction lever controls the operation of the turn signals, headlight beam selection and passing lights. The multifunction lever is located on the left side of the steering column.

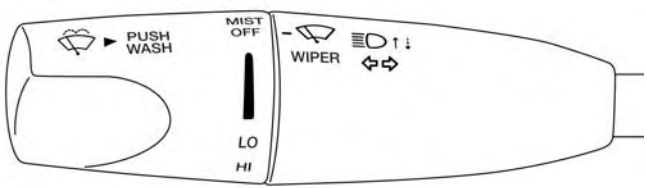

0311114106US

Multifunction Lever

Headlight Switch

The headlight switch is located on the left side of the instrument panel. This switch controls the operation of the headlights, parking lights, instrument panel lights, interior lights and fog lights.

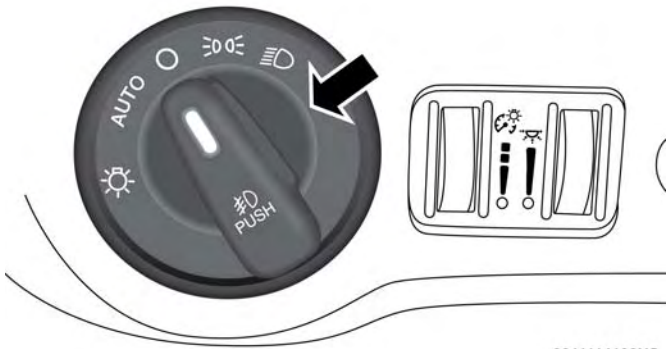

0311114102US

Headlight Switch

From the O (off) position, rotate the headlight switch clockwise to the first detent for parking light and instrument panel light operation. Rotate the headlight switch to the second detent for headlight, parking light and instrument panel light operation.

Daytime Running Lights (DRL)

The LED Daytime Running Lights will come on when the engine starts, headlights are off, and the parking brake is off. The headlights must be used for normal nighttime driving.

NOTE: If allowed, by law, in the country in which the vehicle was purchased, the Daytime Running Lights can be turned on and off using the Uconnect System, refer to "Uconnect Settings" in "Multimedia" for further information.

High/Low Beam Switch

Push the multifunction lever away from you to switch the headlights to high beam. Pull the multifunction lever toward you to switch the headlights back to low beam.

Automatic High Beam — If Equipped

The Automatic High Beam Headlamp Control system provides increased forward lighting at night by automating high beam control through the use of a digital camera mounted to the windshield. This camera detects vehicle specific light and automatically switches from high beams to low beams until the approaching vehicle is out of view.

NOTE:

- The Automatic High Beam Headlamp Control can be turned on or off by selecting "ON" under "Auto High Beam" within your Uconnect settings, as well as turning the headlight switch to the AUTO position. Refer to "Uconnect Settings" in "Multimedia" for further information.
- Broken, muddy, or obstructed headlights and taillights of vehicles in the field of view will cause headlights to remain on longer (closer to the vehicle). Also, dirt, film, and other obstructions on the windshield or camera lens will cause the system to function improperly.

If the windshield is replaced, the camera must be re-aimed to ensure proper performance. See a local authorized dealer.

To Activate

1. Turn the headlight switch to the AUTO headlight position.
2. Push the multifunction lever away from you (toward front of vehicle) to engage the high beam mode.

NOTE: This system will not activate until the vehicle is at or above 15 mph (24 km/h).

To Deactivate

1. Pull the multifunction lever toward you (or rearward in vehicle) to manually deactivate the system (normal operation of low beams).
2. Push back on the multifunction lever to reactivate the system.

The Automatic High Beams can also be deactivated through the Uconnect system. Refer to "Uconnect Settings" in "Multimedia" for further information.

Flash-To-Pass

You can signal another vehicle with your headlights by lightly pulling the multifunction lever toward you. This will cause the high beam headlights to turn on, and remain on, until the lever is released.

Automatic Headlights

This system automatically turns the headlights on or off according to ambient light levels. To turn the system on, rotate the headlight switch counterclockwise to the AUTO position. When the system is on, the headlight time delay feature is also on. This means the headlights will stay on for up to 90 seconds after you place the ignition into the OFF position. The headlight time delay can be programmed 0/30/60/90 seconds.

Refer to "Uconnect Settings" in "Multimedia" for further information.

To turn the automatic system off, move the headlight switch out of the AUTO position.

NOTE: The engine must be running before the headlights will come on in the automatic mode.

Parking Lights

Turn the headlight switch knob to the first detent to turn the parking lights on. This also turns on all instrument panel lighting.

Headlights On With Wipers

When this feature is active, the headlights will turn on after the wipers are turned on if the headlight switch is placed in the AUTO position and programmable feature is set to on. In addition, the headlights will turn off when the wipers are turned off if they were turned on by this feature.

NOTE: The "Headlights On With Wipers" feature can be turned on or off using the Uconnect System. Refer to "Uconnect Settings" in "Multimedia" for further information.

Adaptive Bi-Xenon High Intensity Discharge Headlights — If Equipped

This system automatically swivels the headlight beam pattern horizontally to provide increased illumination in the direction the vehicle is steering.

NOTE:

- Each time the Adaptive Headlight System is turned on, the headlights will initialize by performing a brief sequence of rotations.
- The Adaptive Headlight System is active only when the vehicle is moving forward.

The Adaptive Headlight System can be turned on or off using the Uconnect System, refer to "Uconnect Settings" in "Multimedia" for further information.

Headlight Time Delay

This feature provides the safety of headlight illumination for up to 90 seconds (programmable) when leaving your vehicle in an unlit area.

To activate the delay feature, place the ignition in the OFF position while the headlights are still on. Then, turn off the headlights within 45 seconds. The delay interval begins when the headlight switch is turned off.

If you turn the headlights or parking lights on, or place the ignition in ACC or RUN, the system will cancel the delay.

If you turn the headlights off before the ignition, they will turn off in the normal manner.

NOTE:

- The lights must be turned off within 45 seconds of placing the ignition in the OFF position to activate this feature.
- The headlight delay time is programmable using the Uconnect System, refer to "Uconnect Settings" in "Multimedia" for further information.

Lights-On Reminder

If the headlights or parking lights are on after the ignition is placed in the OFF position, a chime will sound to alert the driver when the driver's door is opened.

Fog Lights — If Equipped

The front fog light switch is built into the headlight switch.

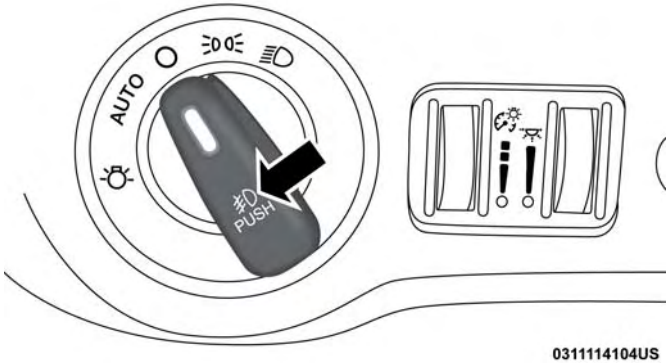

Fog Light Switch

To activate the front fog lights, turn on the parking lights or the low beam headlights and push the headlight switch. To turn off the front fog lights, either push the headlight switch a second time or turn off the headlight switch.

NOTE: The fog lights will operate with the low beam headlights or parking lights on. However, selecting the high beam headlights will turn off the fog lights.

Turn Signals

Move the multifunction lever up or down and the arrows on each side of the instrument cluster display flash to show proper operation of the front and rear turn signal lights.

NOTE:

- If either light remains on and does not flash, or there is a very fast flash rate, check for a defective outside light bulb. If an indicator fails to light when the lever is moved, it would suggest that the indicator bulb is defective.
- A “Turn Signal On” message will appear in the instrument cluster display and a continuous chime will sound if the vehicle is driven more than 1 mile (1.6 km) with either turn signal on.

Lane Change Assist — If Equipped

Tap the multifunction lever up or down once, without moving beyond the detent, and the turn signal (right or left) will flash three times then automatically turn off.

INTERIOR LIGHTS

The interior lights come on when a door is opened.

To protect the battery, the interior lights will turn off automatically ten minutes after the ignition is moved to the OFF position. This will occur if the interior lights were switched on manually or are on because a door is open. The Battery Protection also includes the glove compartment light and the trunk light. To restore interior light operation after automatic battery protection is enabled (lights off), either place the ignition in the ON/RUN position or cycle the light switch.

Courtesy Lights

The courtesy lights can be turned on by pushing the top corner of the lens. To turn the lights off, push the lens a second time.

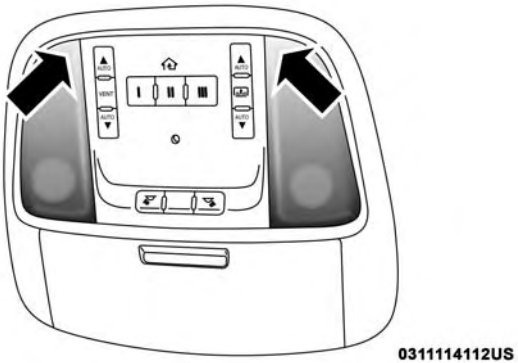

Courtesy Lights

Front Map/Reading Lights — If Equipped

The front map/reading lights are mounted in the overhead console.

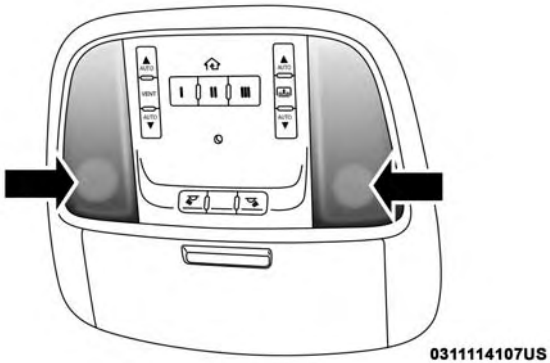

Front Map/Reading Lights

Each light can be turned on by pushing a switch on either side of the console. These buttons are backlit for night time visibility. To turn the lights off, push the switch a second time. The lights will also turn on when the unlock button on the key fob is pushed.

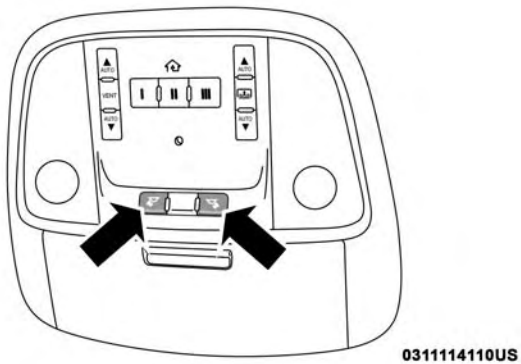

Front Map/Reading Light Switches

Ambient Light — If Equipped

The overhead console is equipped with an ambient light feature. This light casts illumination for improved visibility of the floor and center console area.

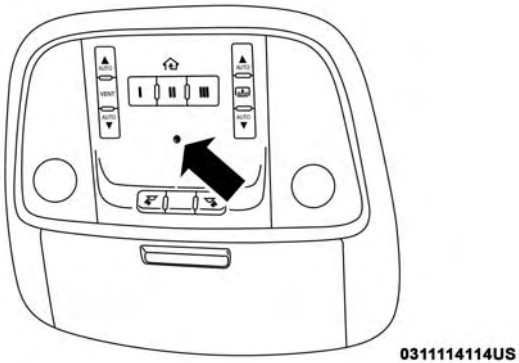

Ambient Light

Dimmer Controls

The dimmer control is part of the headlight switch and is located on the left side of the instrument panel.

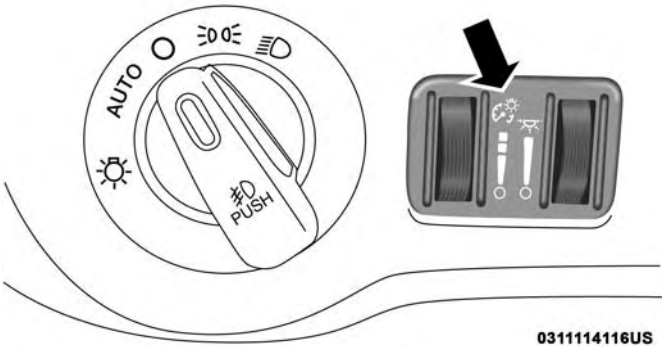

Dimmer Controls

With the parking lights or headlights on, rotating the left dimmer control upward will increase the brightness of the instrument panel lights and lighted cupholders (if equipped).

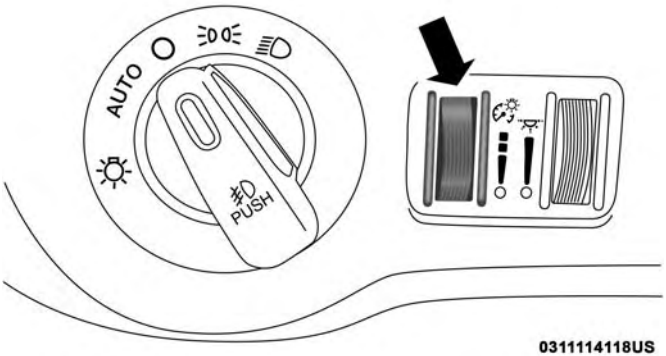

Instrument Panel Dimmer

Dome Light Position

Rotate the instrument panel dimmer control completely upward to the second detent to turn on the interior lights. The interior lights will remain on when the instrument panel dimmer control is in this position.

Interior Light Defeat (Off)

Rotate the instrument panel dimmer control to the extreme bottom (O) off position. The interior lights will remain off when the doors are open.

Parade Mode (Daytime Brightness Feature)

Rotate the instrument panel dimmer control upward to the first detent. This feature brightens all text displays such as the odometer, instrument cluster display, and radio when the position lights or headlights are on.

Ambient Light Control

Rotate the right dimmer control upward or downward to increase or decrease the brightness of the door handle lights and ambient light located in the overhead console.

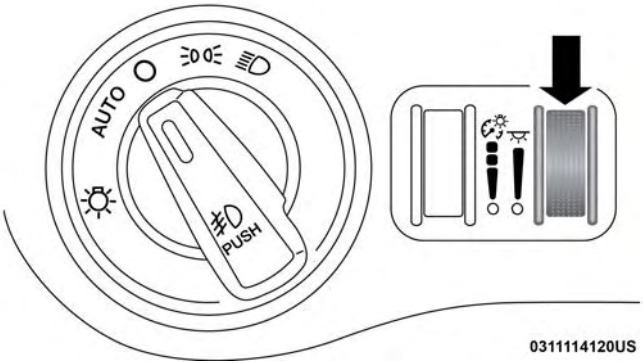

Door Handle/Ambient Light Dimmer

WINDSHIELD WIPERS AND WASHERS

The multifunction lever operates the windshield wipers and washer when the ignition is placed in the ON/RUN or ACC position. The multifunction lever is located on the left side of the steering column.

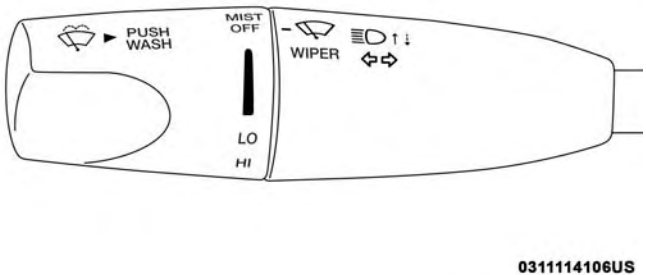

Windshield Wiper/Washer Control

Wiper Operation

Rotate the end of the multifunction lever to the first detent, past the intermittent settings for low-speed wiper operation, or to the second detent past the intermittent settings for high-speed wiper operation.

CAUTION!

- **Turn the windshield wipers off when driving through an automatic car wash. Damage to the windshield wipers may result if the wiper control is left in any position other than off.**
- **In cold weather, always turn off the wiper switch and allow the wipers to return to the park position before turning off the engine. If the wiper switch is left on and the wipers freeze to the windshield, damage to the wiper motor may occur when the vehicle is restarted.**
- **Always remove any buildup of snow that prevents the windshield wiper blades from returning to the off position. If the windshield wiper control is turned off and the blades cannot return to the off position, damage to the wiper motor may occur.**

Intermittent Wiper System

Use the intermittent wiper when weather conditions make a single wiping cycle with a variable pause between cycles desirable. Rotate the end of the multifunction lever to the first detent position, and then turn the end of the lever to select the desired delay interval. There are four delay settings, which allow you to regulate the wipe interval from a minimum of one cycle every second to a maximum of approximately 36 seconds between cycles. The delay intervals will double in duration when the vehicle speed is 10 mph (16 km/h) or less.

Windshield Washers

To use the washer, push the multifunction lever inward (toward the steering column) and hold it for as long as washer spray is desired.

If you activate the washer while the windshield wiper control is in the delay range, the wipers will operate for two wipe cycles after releasing the lever and then resume the intermittent interval previously selected.

If you activate the washer while the windshield wiper is turned off, the wipers will operate for three wipe cycles and then turn off.

WARNING!

Sudden loss of visibility through the windshield could lead to a collision. You might not see other vehicles or other obstacles. To avoid sudden icing of the windshield during freezing weather, warm the windshield with the defroster before and during windshield washer use.

Mist Feature

Rotate the end of the lever downward to the MIST position to activate a single wipe cycle to clear off road mist or spray from a passing vehicle. The wipers will continue to operate until you release the multifunction lever.

NOTE: The mist feature does not activate the washer pump; therefore, no washer fluid will be sprayed on the windshield. The wash function must be used in order to spray the windshield with washer fluid.

Rain Sensing Wipers

This feature senses rain or snowfall on the windshield and automatically activates the wipers for the driver. The feature is especially useful for road splash or over spray from the windshield washers of the vehicle ahead. Rotate the end of the multifunction lever to one of four settings to activate this feature.

The sensitivity of the system can be adjusted with the multifunction lever. Wiper delay position 1 is the least sensitive, and wiper delay position 4 is the most sensitive. Setting 3 should be used for normal rain conditions. Settings 1 and 2 can be used if the driver desires less wiper sensitivity. Setting 4 can be used if the driver desires more sensitivity. The rain sensing wipers will automatically change between an intermittent wipe, slow wipe and a fast wipe depending on the amount of moisture that is sensed on the windshield. Place the wiper switch in the OFF position when not using the system.

The Rain Sensing feature can be turned on and off using the Uconnect System, refer to “Uconnect Settings” in “Multimedia” for further information.

NOTE:

- The Rain Sensing feature will not operate when the wiper speed is in the low or high position.
- The Rain Sensing feature may not function properly when ice or dried salt water is present on the windshield.
- Use of Rain-X or products containing wax or silicone may reduce rain sensor performance.

The Rain Sensing system has protective features for the wiper blades and arms. It will not operate under the following conditions:

- **Low Temperature Wipe Inhibit** — The Rain Sensing feature will not operate when the ignition is placed in the RUN position, the vehicle is stationary and the outside temperature is below 32°F (0°C), unless the wiper control on the multifunction lever is moved, the vehicle speed becomes greater than 0 mph (0 km/h) or the outside temperature rises above freezing.
- **Neutral Wipe Inhibit** — The Rain Sensing feature will not operate when the ignition is placed in the RUN position, the automatic transmission gear selector is in the NEUTRAL position and the vehicle speed is less than 3 mph (5 km/h), unless the wiper control on the multifunction lever is moved or the gear selector is moved out of the NEUTRAL position.
- **Remote Start Mode Inhibit** — On vehicles equipped with Remote Starting system, Rain Sensing wipers are not operational when the vehicle is in the remote start mode. Once the operator is in the vehicle and has placed the ignition switch in the ON/RUN position, rain sensing wiper operation can resume, if it has been selected, and no other inhibit conditions (mentioned previously) exist.

CLIMATE CONTROLS

The Climate Control System allows you to regulate the temperature, air flow, and direction of air circulating throughout the vehicle. The controls are located on the touchscreen (if equipped) and on the instrument panel below the radio.

Automatic Climate Control Overview

Uconnect 4C/4C NAV Automatic Climate Controls

Automatic Climate Control Descriptions

Icon	Description
MAX A/C	**MAX A/C Button** Press and release to change the current setting, the indicator illuminates when MAX A/C is on. Performing this function again will cause the MAX A/C operation to switch into manual mode and the MAX A/C indicator will turn off. **NOTE:** The MAX A/C button is only available on the touchscreen.
A/C	**A/C Button** Press and release to change the current setting, the indicator illuminates when A/C is on.
	Recirculation Button Press and release this button on the touchscreen, or push the button on the faceplate, to change the system between recirculation mode and outside air mode. Recirculation can be used when outside conditions such as smoke, odors, dust, or high humidity are present. Recirculation can be used in all modes. Recirculation may be unavailable (button on the touchscreen greyed out) if conditions exist that could create fogging on the inside of the windshield. The A/C can be deselected manually without disturbing the mode control section. Continuous use of the Recirculation mode may make the inside air stuffy and window fogging may occur. Extended use of this mode is not recommended.

Icon	Description
AUTO	**AUTO Button** Automatically controls the interior cabin temperature by adjusting airflow distribution and amount. Toggling this function will cause the system to switch between manual mode and automatic modes. Refer to “Automatic Operation” within this section for more information.
FRONT	**Front Defrost Button** Press and release to change the current airflow setting to Defrost mode. The indicator illuminates when this feature is on. Air comes from the windshield and side window demist outlets. When the defrost button is selected, the blower level may increase. Use Defrost mode with maximum temperature settings for best windshield and side window defrosting and defogging. When toggling the Front Mode Defrost button, the climate system will return to the previous setting.
REAR	**Rear Defrost Button** Push and release the Rear Defrost Control button to turn on the rear window defroster and the heated outside mirrors (if equipped). An indicator will illuminate when the rear window defroster is on. The rear window defroster automatically turns off after ten minutes.
△ ▽	**Driver And Passenger Temperature Up And Down Buttons** Provides the driver and passenger with independent temperature control. Push the red button on the faceplate or touchscreen or press and slide the temperature bar towards the red arrow button on the touchscreen for warmer temperature settings. Push the blue button on the faceplate or touchscreen or press and slide the temperature bar towards the blue arrow button on the touchscreen for cooler temperature settings.

Icon	Description
SYNC	**SYNC Button** Press the Sync button on the touchscreen to toggle the Sync feature on/off. The Sync indicator is illuminated when this feature is enabled. Sync is used to synchronize the passenger temperature setting with the driver temperature setting. Changing the passenger temperature setting while in Sync will automatically exit this feature. **NOTE:** The Sync button is only available on the touchscreen.
Faceplate Knob **Touchscreen Buttons**	**Blower Control** Blower Control is used to regulate the amount of air forced through the climate system. There are seven blower speeds available. The speeds can be selected using either the blower control knob on the faceplate or the buttons on the touchscreen. • **Faceplate:** The blower speed increases as you turn the blower control knob clockwise from the lowest blower setting. The blower speed decreases as you turn the blower control knob counterclockwise. • **Touchscreen:** Use the small blower icon to reduce the blower setting and the large blower icon to increase the blower setting. Blower can also be selected by pressing the blower bar area between the icons.
Mode Control	Select Mode by pressing one of the Mode buttons on the touchscreen to change the airflow distribution mode. The airflow distribution mode can be adjusted so air comes from the instrument panel outlets, floor outlets, defrost outlets and demist outlets. The Mode settings are as follows:

Icon	Description
Panel Mode	**Panel Mode** Air comes from the outlets in the instrument panel. Each of these outlets can be individually adjusted to direct the flow of air. The air vanes of the center outlets and outboard outlets can be moved up and down or side to side to regulate airflow direction. There is a shut off wheel located below the air vanes to shut off or adjust the amount of airflow from these outlets.
Bi-Level Mode	**Bi-Level Mode** Air comes from the instrument panel outlets and floor outlets. A slight amount of air is directed through the defrost and side window demister outlets. **NOTE:** Bi-Level mode is designed under comfort conditions to provide cooler air out of the panel outlets and warmer air from the floor outlets.
Floor Mode	**Floor Mode** Air comes from the floor outlets. A slight amount of air is directed through the defrost and side window demister outlets.
Mix Mode	**Mix Mode** Air is directed through the floor, defrost, and side window demister outlets. This setting works best in cold or snowy conditions that require extra heat to the windshield. This setting is good for maintaining comfort while reducing moisture on the windshield.
OFF	**Climate Control OFF Button** Press and release this button to turn the Climate Controls off.

Climate Control Functions

A/C (Air Conditioning)

The Air Conditioning (A/C) button allows the operator to manually activate or deactivate the air conditioning system. When the air conditioning system is turned on, cool dehumidified air will flow through the outlets into the cabin. For improved fuel economy, press the A/C button to turn off the air conditioning and manually adjust the blower and airflow mode settings. Also, make sure to select only Panel, Bi-Level, or Floor modes.

NOTE:

- For Manual Climate Controls, if the system is in Mix, Floor or Defrost Mode, the A/C can be turned off, but the A/C system shall remain active to prevent fogging of the windows.
- If fog or mist appears on the windshield or side glass, select Defrost mode, and increase blower speed if needed.
- If your air conditioning performance seems lower than expected, check the front of the A/C condenser (located in front of the radiator), for an accumulation of dirt or insects. Clean with a gentle water spray from the front of the radiator and through the condenser.

MAX A/C

MAX A/C sets the control for maximum cooling performance.

Press and release to toggle between MAX A/C and the prior settings. The button illuminates when MAX A/C is on.

In MAX A/C, the blower level and mode position can be adjusted to desired user settings. Pressing other settings will cause the MAX A/C operation to switch to the selected setting and MAX A/C to exit.

Recirculation

In cold weather, use of Recirculation mode may lead to excessive window fogging. The Recirculation feature may be unavailable (button on the touchscreen greyed out) if conditions exist that could create fogging on the inside of the windshield.

Automatic Temperature Control (ATC)

Automatic Operation

1. Push the AUTO button on the faceplate, or the AUTO button on the touchscreen on the Automatic Temperature Control (ATC) Panel.

2. Next, adjust the temperature that you would like the system to maintain by adjusting the driver and passenger temperature control buttons. Once the desired temperature is displayed, the system will achieve and automatically maintain that comfort level.

3. When the system is set up for your comfort level, it is not necessary to change the settings. You will experience the greatest efficiency by simply allowing the system to function automatically.

NOTE:

- It is not necessary to move the temperature settings for cold or hot vehicles. The system automatically adjusts the temperature, mode, and blower speed to provide comfort as quickly as possible.
- The temperature can be displayed in U.S. or Metric units by selecting the US/Metric customer-programmable feature. Refer to the "Uconnect Settings" in "Multimedia" for further information.

To provide you with maximum comfort in the Automatic mode during cold start-ups, the blower fan will remain on low until the engine warms up. The blower will increase in speed and transition into Auto mode.

Manual Operation Override

This system offers a full complement of manual override features. The AUTO symbol in the front ATC display will be turned off when the system is being used in the manual mode.

Operating Tips

NOTE: Refer to the chart at the end of this section for suggested control settings for various weather conditions.

Summer Operation

The engine cooling system must be protected with a high-quality antifreeze coolant to provide proper corrosion protection and to protect against engine overheating. OAT coolant (conforming to MS.90032) is recommended.

Winter Operation

To ensure the best possible heater and defroster performance, make sure the engine cooling system is functioning properly and the proper amount, type, and concentration of coolant is used. Use of the Air Recirculation mode during Winter months is not recommended, because it may cause window fogging.

Vacation/Storage

Before you store your vehicle, or keep it out of service (i.e., vacation) for two weeks or more, run the air conditioning system at idle for about five minutes, in fresh air with the blower setting on high. This will ensure adequate system lubrication to minimize the possibility of compressor damage when the system is started again.

Window Fogging

Vehicle windows tend to fog on the inside in mild, rainy, and/or humid weather. To clear the windows, select Defrost or Mix mode and increase the front blower speed. Do not use the Recirculation mode without A/C for long periods, as fogging may occur.

CAUTION!

Failure to follow these cautions can cause damage to the heating elements:

- **Use care when washing the inside of the rear window. Do not use abrasive window cleaners on the interior surface of the window. Use a soft cloth and a mild washing solution, wiping parallel to the heating elements. Labels can be peeled off after soaking with warm water.**

(Continued)

CAUTION! *(Continued)*

- **Do not use scrapers, sharp instruments, or abrasive window cleaners on the interior surface of the window.**
- **Keep all objects a safe distance from the window.**

Outside Air Intake

Make sure the air intake, located directly in front of the windshield, is free of obstructions, such as leaves. Leaves collected in the air intake may reduce airflow, and if they enter the plenum, they could plug the water drains. In Winter months, make sure the air intake is clear of ice, slush, and snow.

Cabin Air Filter

The climate control system filters out dust and pollen from the air. Contact an authorized dealer to service your cabin air filter, and to have it replaced when needed.

Operating Tips Chart

WEATHER	CONTROL SETTINGS
Hot weather and vehicle interior is very hot	Set the mode control to , on, and blower on high. Roll down the windows for a minute to flush out the hot air. Once comfort is achieved adjust controls for comfort.
Warm weather	Turn on and set the mode control to the position.
Cool Sunny	Operate in position.
Cool & Humid conditions	Set the mode control to and turn on to keep windows clear.
Cold Weather	Set the mode control to the position. If windshield fogging starts to occur, move the control towards the position.

8000cb71

WINDOWS

Power Window Controls

The window controls on the driver's door control all the door windows.

Power Window Switches

There are single window controls on each passenger door trim panel, which operate the passenger door windows. The window controls will operate only when the ignition is in the ACC or ON/RUN position.

NOTE: For vehicles equipped with the Uconnect system, the power window switches will remain active for up to ten minutes after the ignition is placed in the OFF position. Opening either front door will cancel this feature. The time is programmable. Refer to "Uconnect Settings" in "Multimedia" for further information.

WARNING!

Never leave children unattended in a vehicle, and do not let children play with power windows. Do not leave the key fob in or near the vehicle, or in a location accessible to children, and do not leave the ignition of a vehicle equipped with Keyless Enter-N-Go in the ACC or ON/RUN mode. Occupants, particularly unattended children, can become entrapped by the windows while operating the power window switches. Such entrapment may result in serious injury or death.

Auto-Down Feature

The driver and, in some models, passenger power window switches have an Auto-Down feature. Push the window switch to the second detent, release, and the window will go down automatically.

To open the window part way, push the window switch to the first detent and release it when you want the window to stop.

To stop the window from going all the way down during the Auto-Down operation, pull up on the switch briefly.

Auto-Up Feature With Anti-Pinch Protection — If Equipped

Pull window up switch to second detent for at least a half of a second and the window will go up automatically.

To stop the window during an Auto-Up operation, push or pull the window switch again.

To close the window part way, pull and hold the window switch briefly and release it when you want the window to stop.

NOTE:

- If the window runs into any obstacle during Auto-Closure, it will reverse direction and then go back down. Remove the obstacle and use the window switch again to close the window.

- Any impact due to rough road conditions may trigger the Auto-Reverse function unexpectedly during auto-closure. If this happens, pull and hold the switch to close the window manually.

WARNING!

There is no anti-pinch protection when the window is almost closed. Be sure to clear all objects from the window before closing.

Reset Auto-Up

Should the Auto-Up feature stop working, the window may need to be reset. To reset Auto-Up:

1. Make sure the door is fully closed.
2. Pull the window switch up to close the window completely and continue to hold the switch up for an additional two seconds after the window is closed.
3. Push the window switch down firmly to the second detent to open the window completely and continue to hold the switch down for an additional two seconds after the window is fully open.

Window Lockout Switch

The window lockout switch on the driver's door trim panel allows you to disable the window controls on the rear passenger doors and the rear sunscreen (if equipped). To disable the window controls and the rear sunscreen, push and release the window lockout button (setting it in the down position). To enable the window controls and the rear sunscreen, push and release the window lockout button again (setting it in the up position).

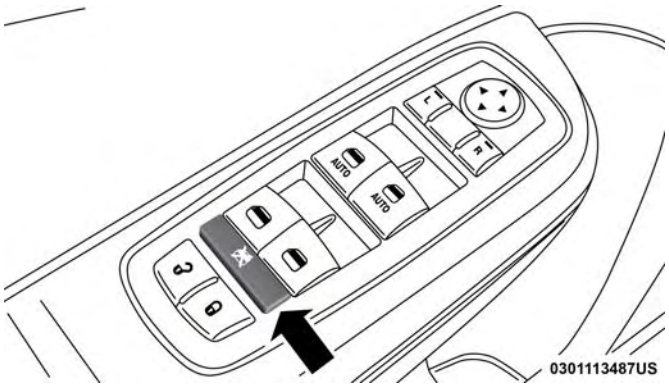

Window Lockout Switch

Wind Buffeting

Wind buffeting can be described as the perception of pressure on the ears or a helicopter-type sound in the ears. Your vehicle may exhibit wind buffeting with the windows down, or the sunroof (if equipped) in certain open or partially open positions. This is a normal occurrence and can be minimized. If the buffeting occurs with the rear windows open, open the front and rear windows together to minimize the buffeting. If the buffeting occurs with the sunroof open, adjust the sunroof opening to minimize the buffeting or open any window.

COMMANDVIEW SUNROOF WITH POWER SHADE — IF EQUIPPED

The CommandView sunroof switch is located to the left between the sun visors on the overhead console.

The power shade switch is located to the right between the sun visors on the overhead console.

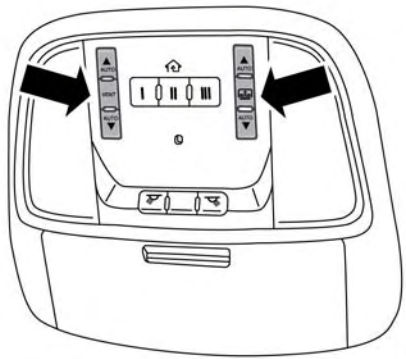

CommandView Sunroof And Power Shade Switches

WARNING!

- **Never leave children unattended in a vehicle, or with access to an unlocked vehicle. Never leave the key fob in or near the vehicle, or in a location accessible to children. Do not leave the ignition of a vehicle equipped with Keyless Enter-N-Go in the ACC or ON/RUN mode. Occupants, particularly unattended children, can become entrapped by the power sunroof while operating the power sunroof switch. Such entrapment may result in serious injury or death.**
- **In a collision, there is a greater risk of being thrown from a vehicle with an open sunroof. You could also be seriously injured or killed. Always fasten your seat belt properly and make sure all passengers are also properly secured.**
- **Do not allow small children to operate the sunroof. Never allow your fingers, other body parts, or any object, to project through the sunroof opening. Injury may result.**

Opening Sunroof

The sunroof has three modes of open operation: Express Open, Manual Open, and Vent Open. If the sunshade is in the closed position when initiating a sunroof open or vent command, the sunshade will automatically open to the half open position prior to the sunroof opening.

Express Open

Push the switch rearward and release it within one-half second, the sunroof and sunshade will open automatically and stop at full open position. During Express Open operation, any other actuation of the sunroof switches will stop the sunroof in a partially open position.

Manual Open

Push and hold the switch rearward, the sunroof and sunshade will open and automatically stop at full open position. Releasing the switch while the sunroof is in motion will stop the sunroof in a partially open position.

Vent Open

Push and release the Vent switch within one-half second and the sunroof will open to the vent position. During Express Vent operation, any other actuation of the sunroof switches will stop the sunroof operation.

Closing Sunroof

Express Close

Push the switch forward and release it within one-half second and the sunroof will close automatically from any position. During Express Close operation, any other actuation of the sunroof switches will stop the sunroof in a partially open position.

Manual Close

Push and hold the switch forward and the sunroof will close from any position and stop at full closed position. Releasing the switch while the sunroof is in motion will stop the sunroof in a partially open position.

Wind Buffeting

Wind buffeting can be described as the perception of pressure on the ears or a helicopter-type sound in the ears. Your vehicle may exhibit wind buffeting with the windows down, or the sunroof (if equipped) in certain open or partially open positions. This is a normal occurrence and can be minimized. If the buffeting occurs with the rear windows open, then open the front and rear windows together to minimize the buffeting. If the buffeting occurs with the sunroof open, adjust the sunroof opening to minimize the buffeting or open any window.

Opening Power Shade

The sunshade has two programmed positions: half open and full open positions. When operating the sunshade from the closed position, the sunshade will always stop at the half open position regardless of express or manual open operation. The switch must be actuated again to continue on to full open position.

Express Open

Push the sunshade switch rearward and release it within one-half second, the sunshade will open to the half open position and stop automatically. Push and release the switch again from the half open position and the sunshade will open to the full open position and stop automatically. During Express Open operation, any other actuation of the sunroof switches will stop the sunshade in a partially open position.

Manual Open

Push and hold the sunshade switch rearward, the sunshade will open to the half open position and stop automatically. Push and hold the sunshade switch again and the sunshade will open to the full open position. Releasing the switch while the sunshade is in motion will stop the sunshade in a partially open position.

Closing Power Shade

If the sunroof is open or vented, the sunshade cannot be closed beyond the half open position. Pushing the sunshade close switch when the sunroof is open/vented and the sunshade is at half open position will first automatically close the sunroof prior to the sunshade closing.

Express Close

Push the sunshade switch forward and release it within one-half second and the sunshade will close automatically. During Express Close operation, any other actuation of the sunroof switches will stop the sunshade in a partially open position.

Manual Close

Push and hold the switch forward and the sunshade will close and stop at full closed position. Releasing the switch while the sunshade is in motion will stop the sunshade in a partially open position.

Pinch Protect Feature

This feature will detect an obstruction in the closing of the sunroof during the Express Close operation. If an obstruction in the path of the sunroof is detected, the sunroof will automatically retract. Remove the obstruction if this occurs.

NOTE: If three consecutive sunroof close attempts result in Pinch Protect reversals, Pinch Protect will disable and the sunroof must be closed in Manual Mode.

Sunroof Maintenance

Use only a non-abrasive cleaner and a soft cloth to clean the glass panel.

Ignition Off Operation

NOTE:

- The power sunroof switch can remain active in Accessory Delay for up to approximately 10 minutes after the vehicle's ignition is placed to the OFF position. Opening either front door will cancel this feature.
- This feature is programmable using the Uconnect System. Refer to "Uconnect Settings" in "Multimedia" for further information.

HOOD

To Open The Hood

Two latches must be released to open the hood.

1. Pull the hood release lever located under the driver's side of the instrument panel.

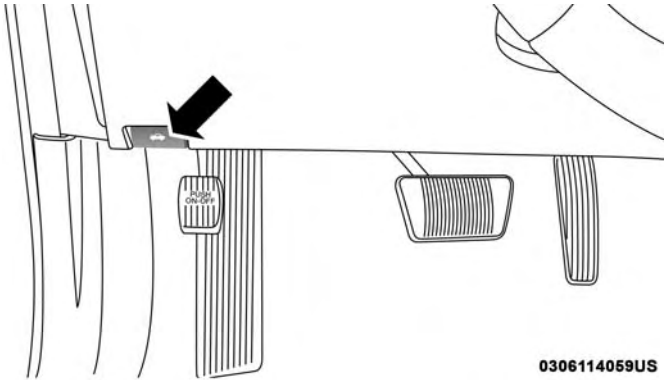

Hood Release Lever

2. Move to the outside of the vehicle and push the safety catch to the left. The safety catch is located under the center front edge of the hood.

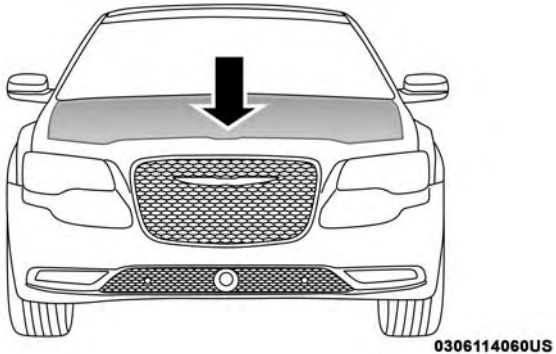

Hood Safety Latch

Use the hood prop rod (if equipped) to secure the hood in the open position.

To Close The Hood

1. Hold up the hood with one hand and with the other hand remove the support rod from its seat and reinsert it into the locking tab.
2. Lower the hood to approximately 12 inches (30 cm) from the engine compartment and drop it. Make sure that the hood is completely closed.

WARNING!

Be sure the hood is fully latched before driving your vehicle. If the hood is not fully latched, it could open when the vehicle is in motion and block your vision. Failure to follow this warning could result in serious injury or death.

CAUTION!

To prevent possible damage, do not slam the hood to close it. Lower hood to approximately 12 inches (30 cm) and drop the hood to close. Make sure hood is fully closed for both latches. Never drive vehicle unless hood is fully closed, with both latches engaged.

TRUNK

Opening

The trunk can be opened from inside the vehicle using the power trunk button located on the instrument panel to the left of the steering wheel.

The trunk lid can be released from outside the vehicle by pushing the trunk button on the key fob twice within five seconds or by using the external release switch located on the underside of the decklid overhang. The release feature will function only when the vehicle is in the unlock condition.

With the ignition in the ON/RUN position, the trunk open symbol will display in the instrument cluster indicating that the trunk is open. The odometer display will reappear once the trunk is closed.

With the ignition in the OFF position, the trunk open symbol will display until the trunk is closed.

NOTE: Refer to "Keyless Enter-N-Go — Passive Entry" in "Doors" in "Getting To Know Your Vehicle" for further information on trunk operation with the Passive Entry feature.

Opening From Inside The Vehicle

Interior Power Trunk Release

Power Trunk Release

The trunk can be opened from inside the vehicle using the power trunk release button located on the instrument panel to the left of the steering wheel.

NOTE: The transmission must be in PARK before the button will operate.

Opening From Outside The Vehicle

To Unlock/Open The Trunk

The trunk may be unlocked/opened using either of the following methods:

- Key Fob Trunk Release Button
- Passive Entry Button

Key Fob Trunk Release Button

Push the power trunk button on the key fob twice within five seconds to release the trunk.

Passive Entry Button

Push the trunk passive entry button which is located on the back of the trunk lid. With a valid Passive Entry key fob within 5 ft (1.5 m) of the trunk, push the passive entry button to open the trunk.

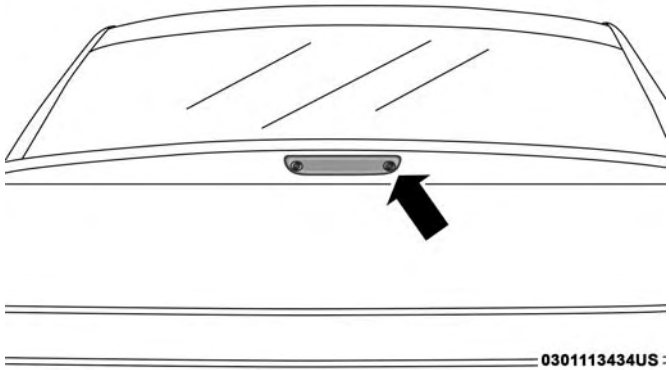

Trunk Passive Entry Button

Closing

With one or more hands placed on the outside trunk surface push the trunk lid down until you hear the trunk lock latch into place.

NOTE: Before closing the trunk lid make sure your key fob isn't inside the trunk area. The trunk will latch then automatically unlock if the key fob is sensed not allowing the key fob to be locked in the trunk area.

Trunk Safety

Trunk Emergency Release

As a security measure, a trunk internal emergency release lever is built into the trunk latching mechanism. In the event of an individual being locked inside the trunk, the trunk can be opened by actuating the glow-in-the-dark handle attached to the trunk latching mechanism.

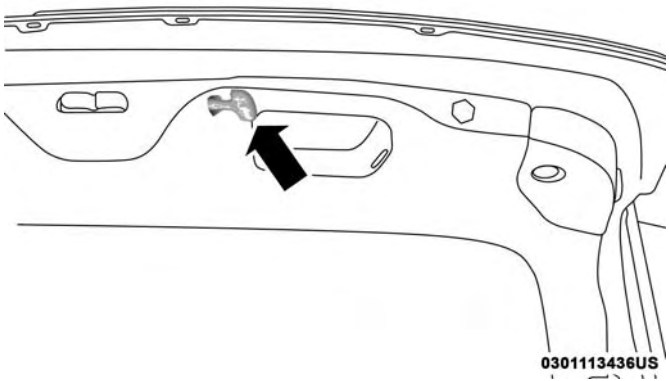

Trunk Emergency Release

WARNING!

Do not allow children to have access to the trunk, either by climbing into the trunk from outside, or through the inside of the vehicle. Always close the trunk lid when your vehicle is unattended. Once in the trunk, young children may not be able to escape, even if they entered through the rear seat. If trapped in the trunk, children can die from suffocation or heat stroke.

Cargo Area Features

Cargo Area — Vehicles Equipped With 60/40 Split-Folding Rear Seat

The 60/40 split-folding rear seat provides cargo-carrying versatility. The seatbacks fold down easily by pulling nylon tabs between the seatbacks and the bolsters. When the seats are folded down, they provide a continuous, nearly-flat extension of the load floor.

When the seatback is folded to the upright position, make sure it is latched by strongly pulling on the top of the seatback above the seat strap.

WARNING!

- **Be certain that the seatback is securely locked into position. If the seatback is not securely locked into position, the seat will not provide the proper stability for child seats and/or passengers. An improperly latched seat could cause serious injury.**
- **The cargo area in the rear of the vehicle (with the rear seatbacks in the locked-up or folded down position) should not be used as a play area by children when the vehicle is in motion. They could be seriously injured in a collision. Children should be seated and using the proper restraint system.**
- **To help protect against personal injury, passengers should not be seated in the rear cargo area. The rear cargo space is intended for load carrying purposes only, not for passengers, who should sit in seats and use seat belts.**

(Continued)

WARNING! ***(Continued)***

The weight and position of cargo and passengers can change the vehicle center of gravity and vehicle handling. To avoid loss of control resulting in personal injury, follow these guidelines for loading your vehicle:

- **Always place cargo evenly on the cargo floor. Put heavier objects as low and as far forward as possible.**
- **Place as much cargo as possible in front of the rear axle. Too much weight or improperly placed weight over or behind the rear axle can cause the rear of the vehicle to sway.**
- **Do not pile luggage or cargo higher than the top of the seatback. This could impair visibility or become a dangerous projectile in a sudden stop or collision.**

Trunk Mat — If Equipped

A trunk mat covers the bottom of the cargo area. The trunk mat is used to protect the interior of the trunk from mud, snow, and debris.

Grocery Bag Hooks

The rear cargo area is equipped with grocery bag hooks, located on either side of the rear cargo area.

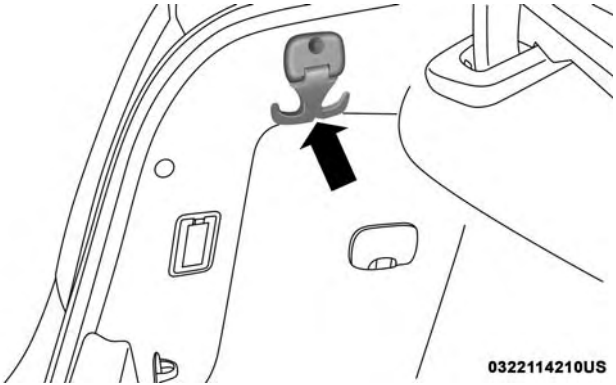

Grocery Bag Hooks

CAUTION!
Do not exceed the maximum weight limit 50 lbs (22 kg) of the grocery bag hook. Damage may occur to hook and mounting surface.

Cargo Net — If Equipped

The rear cargo area may be equipped with a cargo net to keep items secure while driving.

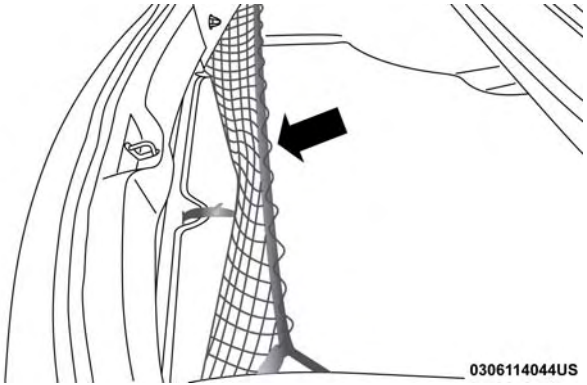

Rear Cargo Net

Attachment

To attach the cargo net the clips must be hooked through the loops on both sides of the cargo area.

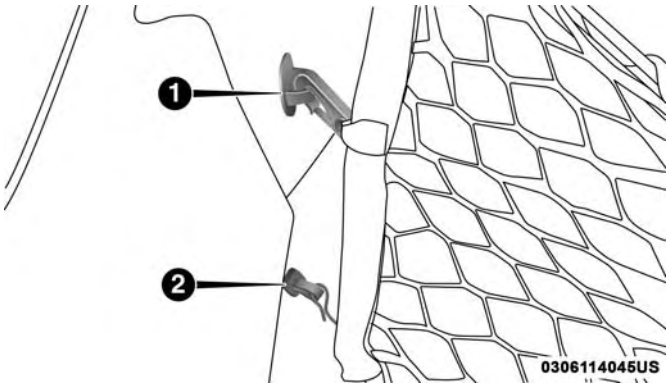

Cargo Net Attachments

1 — Top Attachment
2 — Bottom Attachment

LOAD LEVELING SYSTEM — IF EQUIPPED

The automatic load leveling system will provide a level-riding vehicle under most passenger and cargo loading conditions.

A hydraulic pump contained within the shock absorbers raises the rear of the vehicle to the correct height. It takes approximately 1 mile (1.6 km) of driving for the leveling to complete depending on road surface conditions.

If the leveled vehicle is not moved for approximately 15 hours, the leveling system will bleed itself down. The vehicle must be driven to reset the system.

GARAGE DOOR OPENER — IF EQUIPPED

HomeLink replaces up to three hand-held transmitters that operate devices such as garage door openers, motorized gates, lighting or home security systems. The HomeLink unit is powered by your vehicle's battery.

The HomeLink buttons, located on either the overhead console, headliner or sunvisor, designate the three different HomeLink channels. The HomeLink indicator is located above the center button.

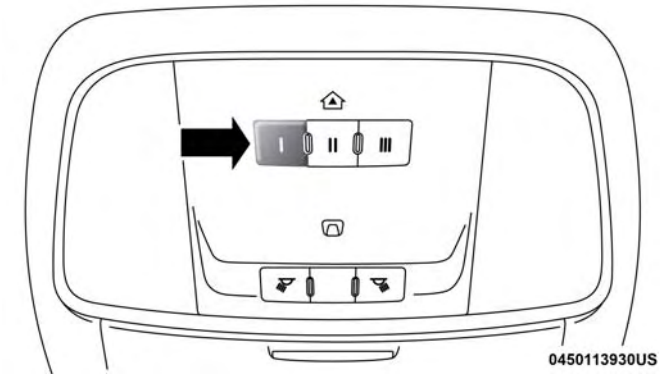

Overhead Console HomeLink Buttons

NOTE: HomeLink is disabled when the Vehicle Security Alarm is active.

Before You Begin Programming HomeLink

Be sure that your vehicle is parked outside of the garage before you begin programming.

For more efficient programming and accurate transmission of the radio-frequency signal it is recommended that a new battery be placed in the hand-held transmitter of the device that is being programmed to the HomeLink system.

To erase the channels, place the ignition in the ON/RUN position, and push and hold the two outside HomeLink buttons (I and III) for up to 20 seconds or until the orange indicator flashes.

NOTE:

- Erasing all channels should only be performed when programming HomeLink for the first time. Do not erase channels when programming additional buttons.
- If you have any problems, or require assistance, please call toll-free 1-800-355-3515 or, on the Internet at HomeLink.com for information or assistance.

Programming A Rolling Code

For programming garage door openers that were manufactured after 1995. These garage door openers can be identified by the “LEARN” or “TRAIN” button located where the hanging antenna is attached to the garage door opener.

NOTE: It is NOT the button that is normally used to open and close the door. The name and color of the button may vary by manufacturer.

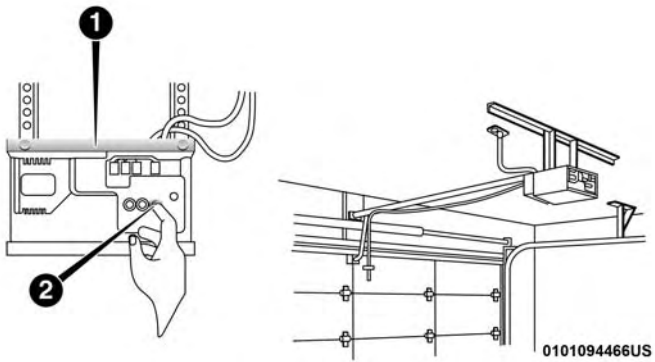

Training The Garage Door Opener

1 — Door Opener
2 — Training Button

1. Place the ignition in the ON/RUN position.
2. Place the hand-held transmitter 1 to 3 inches (3 to 8 cm) away from the HomeLink button you wish to program while keeping the HomeLink indicator light in view.
3. Push and hold the HomeLink button you want to program while you push and hold the hand-held transmitter button.
4. Continue to hold both buttons and observe the indicator light. The HomeLink indicator will flash slowly and then rapidly after HomeLink has received the frequency signal from the hand-held transmitter. Release both buttons after the indicator light changes from slow to rapid.
5. At the garage door opener motor (in the garage), locate the “LEARN” or “TRAINING” button. This can usually be found where the hanging antenna wire is attached to the garage door opener/device motor. Firmly push and release the “LEARN” or “TRAINING” button. On some garage door openers/devices there may be a light that blinks when the garage door opener/device is in the LEARN/TRAIN mode.

NOTE: You have 30 seconds in which to initiate the next step after the LEARN button has been pushed.

6. Return to the vehicle and push the programmed HomeLink button twice (holding the button for two seconds each time). If the garage door opener/device activates, programming is complete.

NOTE: If the garage door opener/device does not activate, push the button a third time (for two seconds) to complete the training.

To program the remaining two HomeLink buttons, repeat each step for each remaining button. DO NOT erase the channels.

Reprogramming A Single HomeLink Button (Rolling Code)

To reprogram a channel that has been previously trained, follow these steps:

1. Cycle the ignition to the ON/RUN position.
2. Push and hold the desired HomeLink button until the indicator light begins to flash after 20 seconds. Do not release the button.
3. Without releasing the button proceed with "Programming A Rolling Code" step 2 and follow all remaining steps."

Programming A Non-Rolling Code

For programming Garage Door Openers manufactured before 1995.

1. Cycle the ignition to the ON/RUN position.
2. Place the hand-held transmitter 1 to 3 inches (3 to 8 cm) away from the HomeLink button you wish to program while keeping the HomeLink indicator light in view.
3. Press and hold the HomeLink button you want to program while you press and hold the hand-held transmitter button.
4. Continue to hold both buttons and observe the indicator light. The HomeLink indicator will flash slowly and then rapidly after HomeLink has received the frequency signal from the hand-held transmitter. Release both buttons after the indicator light changes from slow to rapid.
5. Press and hold the programmed HomeLink button and observe the indicator light.
   - If the indicator light stays on constantly, programming is complete and the garage door/device should activate when the HomeLink button is pressed.
   - To program the two remaining HomeLink buttons, repeat each step for each remaining button. DO NOT erase the channels.

Reprogramming A Single HomeLink Button (Non-Rolling Code)

To reprogram a channel that has been previously trained, follow these steps:

1. Cycle the ignition to the ON/RUN position.
2. Press and hold the desired HomeLink button until the indicator light begins to flash after 20 seconds. Do not release the button.
3. Without releasing the button, proceed with "Programming A Non-Rolling Code" step 2 and follow all remaining steps.

Canadian/Gate Operator Programming

For programming transmitters in Canada/United States that require the transmitter signals to "time-out" after several seconds of transmission.

Canadian radio frequency laws require transmitter signals to time-out (or quit) after several seconds of transmission – which may not be long enough for HomeLink to pick up the signal during programming. Similar to this Canadian law, some U.S. gate operators are designed to time-out in the same manner.

It may be helpful to unplug the device during the cycling process to prevent possible overheating of the garage door or gate motor.

1. Cycle the ignition to the ON/RUN position.
2. Place the hand-held transmitter 1 to 3 inches (3 to 8 cm) away from the HomeLink button you wish to program while keeping the HomeLink indicator light in view.
3. Continue to press and hold the HomeLink button, while you press and release ("cycle") your hand-held transmitter every two seconds until HomeLink has successfully accepted the frequency signal. The indicator light will flash slowly and then rapidly when fully trained.
4. Watch for the HomeLink indicator to change flash rates. When it changes, it is programmed. It may take up to 30 seconds or longer in rare cases. The garage door may open and close while you are programming.
5. Press and hold the programmed HomeLink button and observe the indicator light.

NOTE:

- If the indicator light stays on constantly, programming is complete and the garage door/device should activate when the HomeLink button is pressed.
- To program the two remaining HomeLink buttons, repeat each step for each remaining button. DO NOT erase the channels.

If you unplugged the garage door opener/device for programming, plug it back in at this time.

Reprogramming A Single HomeLink Button (Canadian/ Gate Operator)

To reprogram a channel that has been previously trained, follow these steps:

1. Cycle the ignition to the ON/RUN position.
2. Press and hold the desired HomeLink button until the indicator light begins to flash after 20 seconds. Do not release the button.
3. Without releasing the button, proceed with "Canadian/ Gate Operator Programming" step 2 and follow all remaining steps.

Using HomeLink

To operate, push and release the programmed HomeLink button. Activation will now occur for the programmed device (i.e. garage door opener, gate operator, security system, entry door lock, home/office lighting, etc.). The hand-held transmitter of the device may also be used at any time.

Security

It is advised to erase all channels before you sell or turn in your vehicle.

To do this, push and hold the two outside buttons for 20 seconds until the orange indicator flashes. Note that all channels will be erased. Individual channels cannot be erased.

The HomeLink Universal Transceiver is disabled when the Vehicle Security Alarm is active.

Troubleshooting Tips

If you are having trouble programming HomeLink, here are some of the most common solutions:

- Replace the battery in the Garage Door Opener hand-held transmitter.

- Push the LEARN button on the Garage Door Opener to complete the training for a Rolling Code.
- Did you unplug the device for programming and remember to plug it back in?

If you have any problems, or require assistance, please call toll-free 1-800-355-3515 or, on the Internet at HomeLink.com for information or assistance.

WARNING!

- **Vehicle exhaust contains carbon monoxide, a dangerous gas. Do not run your vehicle in the garage while programming the transceiver. Exhaust gas can cause serious injury or death.**
- **Your motorized door or gate will open and close while you are programming the universal transceiver. Do not program the transceiver if people, pets or other objects are in the path of the door or gate. Only use this transceiver with a garage door opener that has a "stop and reverse" feature as required by Federal safety standards. This includes most garage door opener models manufactured after 1982. Do not**

(Continued)

WARNING! ***(Continued)***

use a garage door opener without these safety features. Call toll-free 1-800-355-3515 or, on the Internet at HomeLink.com for safety information or assistance.

General Information

The following regulatory statement applies to all Radio Frequency (RF) devices equipped in this vehicle:

This device complies with Part 15 of the FCC Rules and with Innovation, Science and Economic Development Canada license-exempt RSS standard(s). Operation is subject to the following two conditions:

1. This device may not cause harmful interference, and
2. This device must accept any interference received, including interference that may cause undesired operation.

NOTE: Changes or modifications not expressly approved by the party responsible for compliance could void the user's authority to operate the equipment.

INTERNAL EQUIPMENT

Storage

Glove Compartment

The glove compartment is located on the passenger side of the instrument panel.

To open the glove compartment, pull the release handle.

Glove Compartment

Console Features

There is a cubby bin located forward of the gear selector. The cubby bin is covered with a push-push actuated door. Push inward on the door to open it, push the door a second time to close it.

Two separate storage compartments are also located underneath the center console armrest.

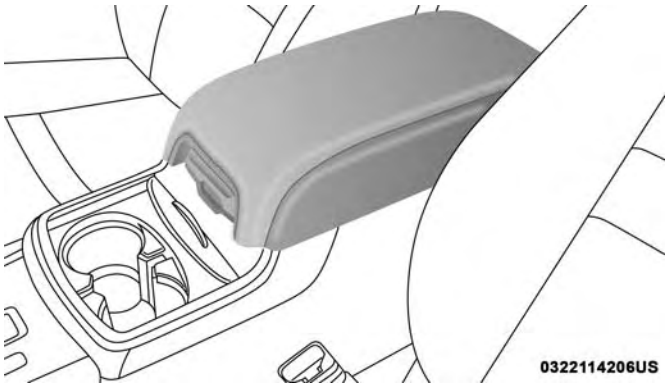

Center Console

Inside the center console armrest, there is a removable upper storage tray that can be slid forward/rearward on rails for access to the lower storage area. This tray has an integrated coin holder, along with additional area for small items and handheld devices. Below the upper tray, the lower storage compartment is made for larger items, like tissue boxes. In addition, the 12 volt power outlet, USB and Aux jack are located here.

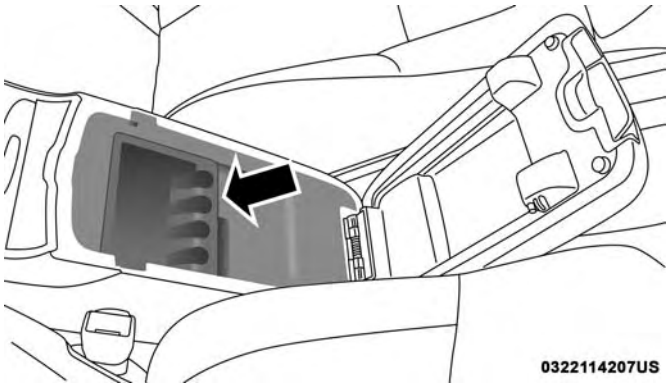

Upper Storage Tray

WARNING!

Do not operate this vehicle with a console compartment lid in the open position. Driving with the console compartment lid open may result in injury in a collision.

Door Storage

The door panels contain storage areas.

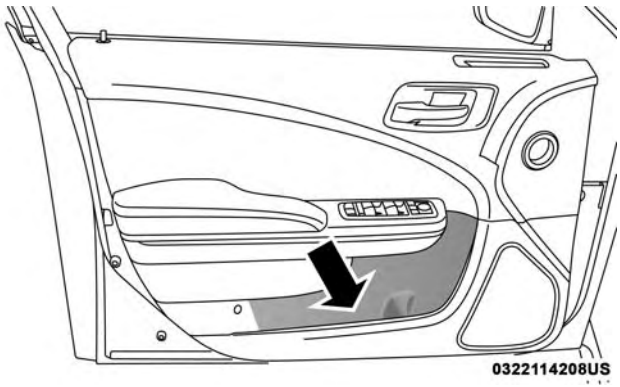

Front Door Trim Storage

Rear Seat Armrest Storage — If Equipped

For rear passengers there is a storage bin located in the armrest. Lift upward on the latch to open the storage compartment.

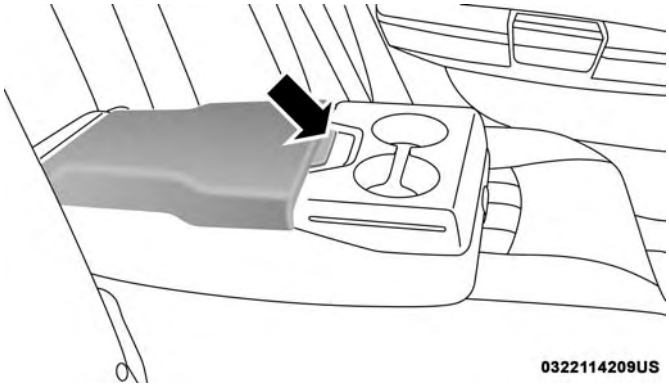

Rear Armrest Storage

Cupholders

The cupholders are located in the forward edge of the center console.

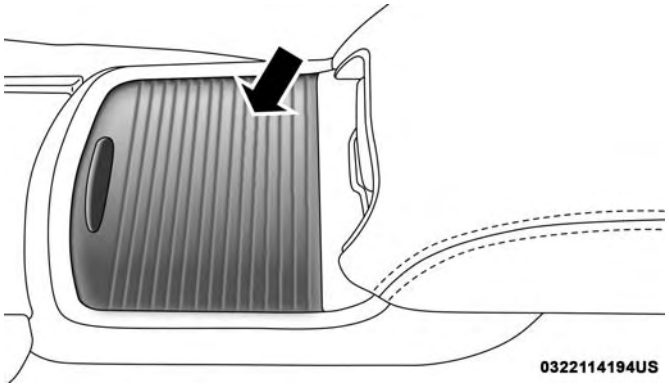

Retractable Cover

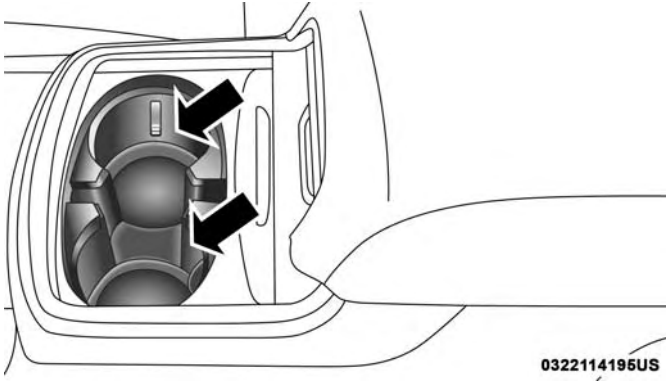

Front Cupholders

The rear seat cupholders are located in the center armrest between the rear seats. The cupholders are positioned forward in the armrest and side-by-side to provide convenient access to beverage cans or bottles while maintaining a resting place for the rear occupant's elbows.

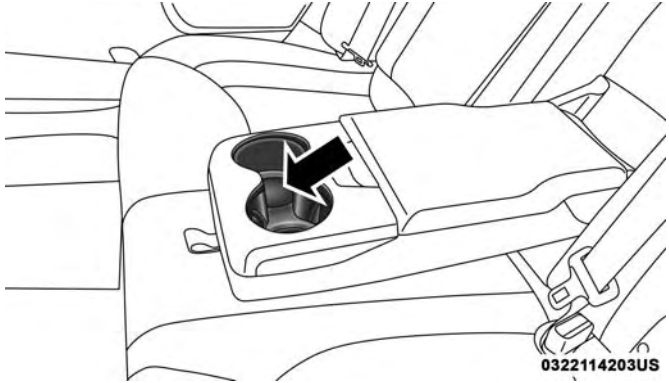

Rear Seat Cupholders

Lighted Cupholders — If Equipped

On some vehicles the rear cupholders are equipped with a light ring that illuminates the cupholders for the rear passengers. The light ring is controlled by the Dimmer Control. Refer to "Interior Lights" in "Getting To Know Your Vehicle" for further information.

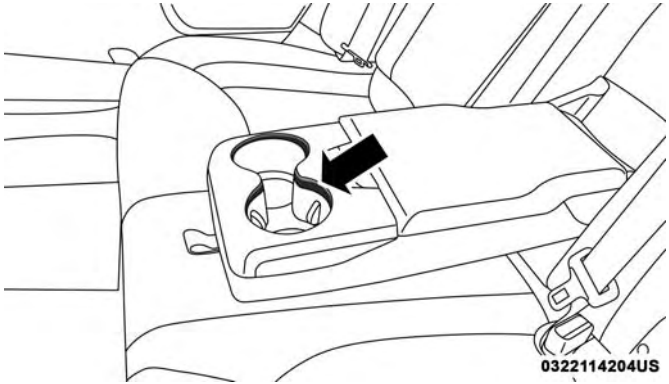

Light Ring In Rear Cupholder

Heated And Cooled Cupholders — If Equipped

Your vehicle may be equipped with heated and cooled cupholders. The cupholders are designed to help keep warm beverages warm and cool beverages cool.

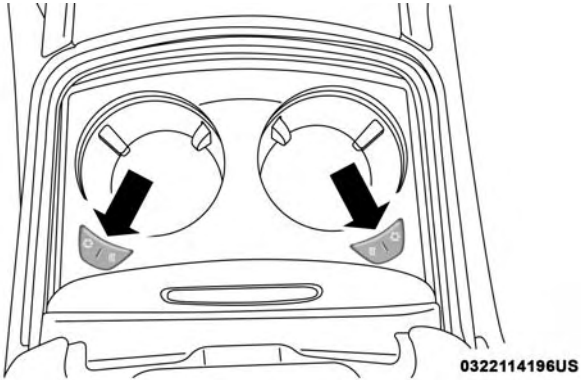

Heated And Cooled Cupholder Switches

Push the "Cold" symbol once to turn on the cupholder; push the symbol a second time to turn the cupholder off. Push the "Hot" symbol once to activate the cupholder; push the symbol a second time to turn off the cupholder.

WARNING!

When using the cupholder in the "Hot" position, avoid contact with the heated portion of the cupholder in order to reduce the possibility of burns. Persons who are unable to feel pain to the skin because of advanced

(Continued)

WARNING! *(Continued)*

age, chronic illness, diabetes, spinal cord injuries, medication, alcohol use, exhaustion or other physical condition must exercise particular care in order to prevent serious burn injury. Keep the cupholder free of debris or stray objects when operated in the "Hot" position.

Power Sunshade — If Equipped

Your vehicle may be equipped with a power sunshade that will reduce the amount of sunlight that will shine through the rear windshield.

The power sunshade can be operated using the Uconnect System.

Press the "Controls" button and then press the "Rear Sunshade" button to raise the power sunscreen. Press the "Sunshade" button a second time to lower the sunshade.

If the sunshade is in the raised position and the vehicle is placed in REVERSE, the sunshade will automatically fully lower. When the transmission is shifted out of REVERSE the sunshade will automatically return to the fully raised position after a brief delay.

The power sunshade can also be operated by passengers in the rears seats. The power sunshade switch is located on the back of the center console between the heated seat switches. Push the switch once to raise the sunshade. Push the switch a second time to lower the sunshade.

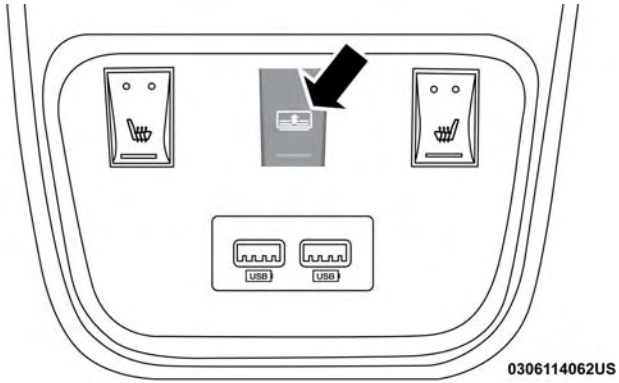

Power Sunshade Switch Behind Center Console

NOTE: The rear sunshade control switch can be locked out along with the rear passenger window controls from the driver switch window lockout switch.

Electrical Power Outlets

Your vehicle is equipped with one 12 Volt (13 Amp) power outlet on the instrument panel and one 12 Volt (13 Amp) power outlet in the center console that can be used to power cellular phones, small electronics and other low powered electrical accessories. The power outlets are labeled with either a “key” or a “battery” symbol to indicate how the outlet is powered. Power outlets labeled with a “key” are powered when the ignition switch is in the ON or ACC position, while the outlets labeled with a “battery” are connected directly to the battery and powered at all times.

NOTE:

- All accessories connected to the “battery” powered outlets should be removed or turned off when the vehicle is not in use to protect the battery against discharge.

The front power outlet is located inside the storage area on the center stack of the instrument panel.

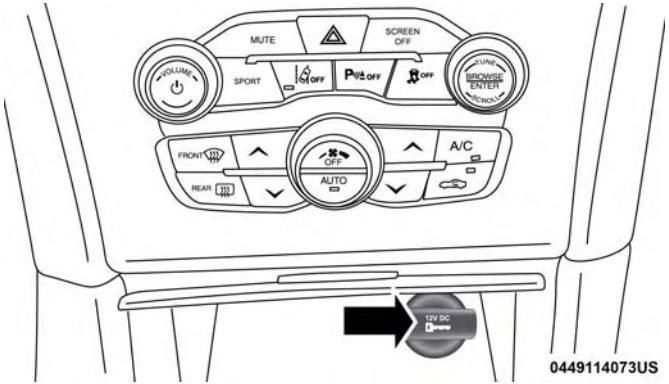

Front Power Outlet

WARNING!

Do not place ashes inside the cubby bin located on the center console on vehicles not equipped with the ash receiver tray. A fire leading to bodily injury could result.

In addition to the front power outlet, there is also a power outlet located in the storage area of the center console.

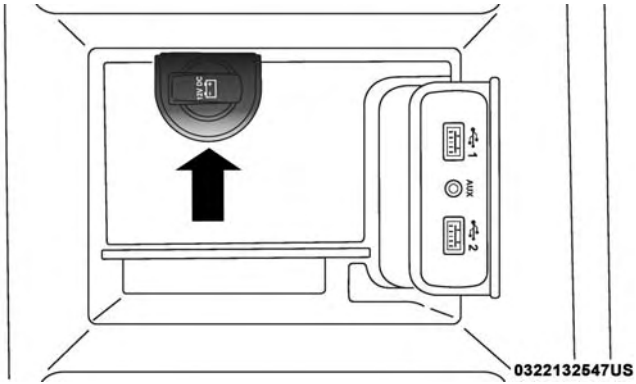

Center Console Power Outlet

NOTE: If the Media Hub is in use, do not exceed the maximum power of 100 Watts (8 Amps) for the center console power outlet. When the Media Hub is not in use, the outlet can deliver up to 120 Watts (10 Amps). If the power rating is exceeded, the fuse protecting the system will need to be replaced.

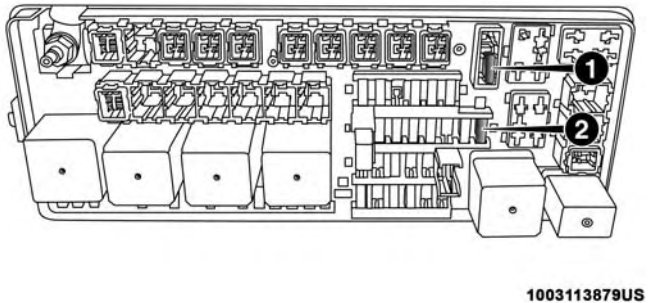

Power Outlet Fuse Locations

1 — #12 Fuse 20 Amp Yellow Instrument Panel Power Outlet / Dual USB Charge Only Ports
2 — #38 Fuse 20 Amp Yellow Center Console Power Outlet / Media Hub

NOTE: The instrument panel power outlet and dual rear console USB ports can be changed to “battery” powered all the time by moving the #12 20 Amp fuse from “IGN” to “B+”. Refer to “Fuses” in “In Case Of Emergency”.

WARNING!

To avoid serious injury or death:
- Only devices designed for use in this type of outlet should be inserted into any 12 Volt outlet.
- Do not touch with wet hands.
- Close the lid when not in use and while driving the vehicle.
- If this outlet is mishandled, it may cause an electric shock and failure.

CAUTION!

- Many accessories that can be plugged in draw power from the vehicle's battery even when not in use (i.e., cellular phones, etc.). Eventually, if plugged in long enough, the vehicle's battery will discharge sufficiently to degrade battery life and/or prevent the engine from starting.
- Accessories that draw higher power (i.e., coolers, vacuum cleaners, lights, etc.) will degrade the battery even more quickly. Only use these intermittently and with greater caution.

(Continued)

CAUTION! *(Continued)*

- After the use of high power draw accessories or long periods of the vehicle not being started (with accessories still plugged in), the vehicle must be driven a sufficient length of time to allow the alternator to recharge the vehicle's battery.
- Power outlets are designed for accessory plugs only. Do not hang any type of accessory or accessory bracket from the plug. Improper use of the power outlet can cause damage.

Wireless Charging Pad — If Equipped

Your vehicle may be equipped with an Open Dots compatible wire-free phone charging surface located in the center console. The wireless charger features continuous wireless charging during vehicle operation and allows for uninterrupted Bluetooth streaming to properly equipped vehicle audio systems.

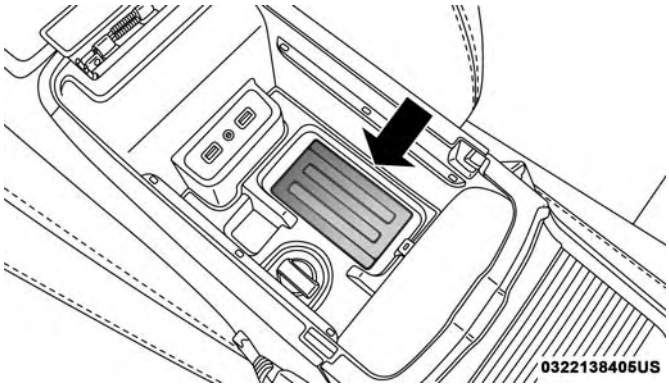

Wireless Charging Pad

In order to enjoy the convenience of Open Dots wire-free charging, you must obtain an aftermarket wireless-enabled case and then install the case on your phone. Set the phone on the wireless charging pad face up. The charging indicator on your phone will light up indicating that your phone is charging.

NOTE: The charging pad is safe to the touch. However, if metallic items are placed on the charging surface while in use, the device will turn off. Clean all spills immediately and allow to dry before using.

For phones that already have built-in wireless charging capability (Samsung, Apple iPhone 8, 8 Plus and X Phones), a Qi Adapter is available to charge your phone using the Open Dot wire-free phone charging surface. Simply place the Qi Adapter (dot side down) on the charging surface and then place your built-in charging capable phone face up on top of the Qi Adapter. This product may not be compatible with all vehicle/Open Dots compatible wire-free phone charging surface combinations.

CAUTION!

The key fob should not be placed on the charging pad or within 15 cm (150 mm) of it. Doing so can cause excessive heat buildup and damage to the fob. Placing the fob in close proximity of the charging pad blocks the fob from being detected by the vehicle and prevents the vehicle from starting.

To get your free aftermarket phone case or Qi Adapter, go to http://invehiclewirelesscharging.com. You will need your vehicle/voucher identification number (located in your vehicle's glove box). If you have any questions or are not sure if you need a phone case or the Qi Adapter, please call our customer support line for assistance: 877–360–7702

Sunglasses Bin Door

At the front of the console, a compartment is provided for the storage of a pair of sunglasses. The storage compartment access is a "push/push" design. Push the chrome pad on the door to open. Push the chrome pad on the door to close.

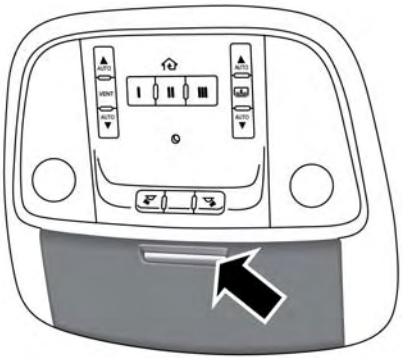

0322114190US

Sunglasses Bin Door

GETTING TO KNOW YOUR INSTRUMENT PANEL

CONTENTS

■ INSTRUMENT CLUSTER 120

□ Instrument Cluster Descriptions 121

■ INSTRUMENT CLUSTER DISPLAY 122

□ Location And Controls 122

□ Engine Oil Life Reset 124

□ Instrument Cluster Display Selectable Menu Items 125

□ Battery Saver On/Battery Saver Mode Message — Electrical Load Reduction Actions — If Equipped 129

■ WARNING LIGHTS AND MESSAGES 131

□ Red Warning Lights 131

□ Yellow Warning Lights 135

□ Yellow Indicator Lights. 140

□ Green Indicator Lights 140

□ White Indicator Lights 141

□ Blue Indicator Lights 142

■ ONBOARD DIAGNOSTIC SYSTEM — OBD II . . .142

□ Onboard Diagnostic System (OBD II) Cybersecurity 143

■ EMISSIONS INSPECTION AND MAINTENANCE PROGRAMS 143

INSTRUMENT CLUSTER

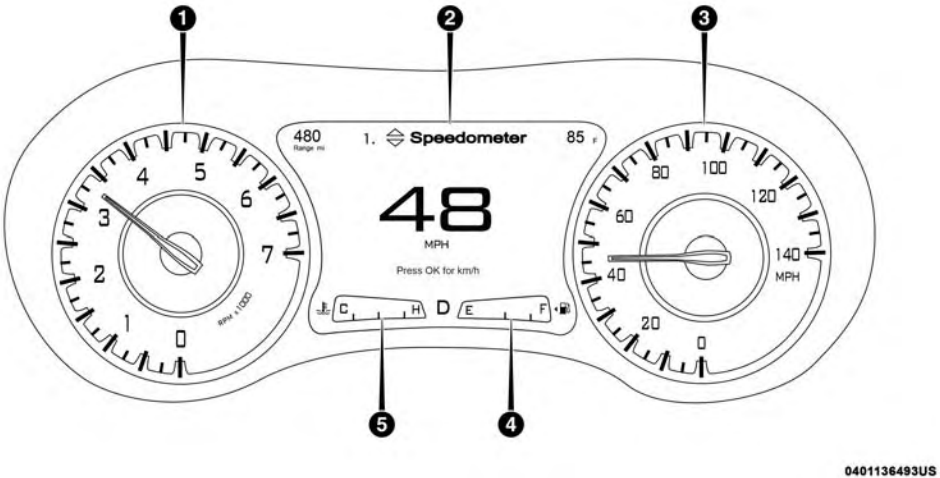

Premium Instrument Cluster

Instrument Cluster Descriptions

1. Tachometer
   - Indicates the engine speed in revolutions per minute (RPM x 1000).
2. Instrument Cluster Display
   - When the appropriate conditions exist, this display shows the instrument cluster display messages. Refer to "Instrument Cluster Display" in "Getting To Know Your Instrument Panel" for further information.
3. Speedometer
   - Indicates vehicle speed.
4. Fuel Gauge
   - The pointer shows the level of fuel in the fuel tank when the Keyless Push Button Ignition is in the ON/RUN position.
   - The fuel pump symbol points to the side of the vehicle where the fuel door is located.
5. Temperature Gauge
   - The temperature gauge shows engine coolant temperature. Any reading within the normal range indicates that the engine cooling system is operating satisfactorily.
   - The gauge pointer will likely indicate a higher temperature when driving in hot weather, up mountain grades, or when towing a trailer. It should not be allowed to exceed the upper limits of the normal operating range.

WARNING!

A hot engine cooling system is dangerous. You or others could be badly burned by steam or boiling coolant. You may want to call an authorized dealer for service if your vehicle overheats. If you decide to look under the hood yourself, see "Servicing And Maintenance." Follow the warnings under the Cooling System Pressure Cap paragraph.

CAUTION!

Driving with a hot engine cooling system could damage your vehicle. If the temperature gauge reads "H," pull over and stop the vehicle. Idle the vehicle with the air conditioner turned off until the pointer drops back into the normal range. If the pointer remains on the "H," turn the engine off immediately and call an authorized dealer for service.

NOTE: The hard telltales will illuminate for a bulb check when the ignition is first cycled.

INSTRUMENT CLUSTER DISPLAY

Your vehicle will be equipped with an instrument cluster display, which offers useful information to the driver. With the ignition in the STOP/OFF mode, opening/closing of a door will activate the display for viewing, and display the total miles, or kilometers, in the odometer. Your instrument cluster display is designed to display important information about your vehicle's systems and features. Using a driver interactive display located on the instrument panel, your instrument cluster display can show you how systems are working and give you warnings when they are not. The steering wheel mounted controls allow you to scroll through the main menus and submenus. You can access the specific information you want and make selections and adjustments.

Location And Controls

The instrument cluster display features an interactive display which is located in the instrument cluster.

This system conveniently allows the driver to select a variety of useful information by pushing the arrow buttons located on the left side of the steering wheel. The instrument cluster display menu items consist of the following:

- Speedometer
- Vehicle Info
- Driver Assist — If Equipped
- Fuel Economy
- Trip
- Audio
- Messages
- Screen Setup

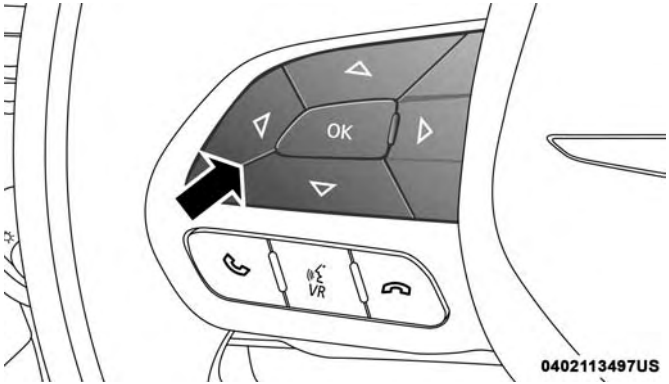

Instrument Cluster Display Controls

Up And Down Arrow Buttons:

Using the **up** or **down** arrows allows you to cycle through the Main Menu Items.

Changes the Main Screen area and Menu Title area.

Left And Right Arrow Buttons:

Using the **left** or **right** arrow button allows you to cycle through the submenu items of the Main menu item.

NOTE:

- Holding the **up/down** or **left/right** arrow button will loop the user through the currently selected menu or options presented on the screen.
- Main menu and submenu's wrap for continuous scrolling.
- Upon returning to a main menu, the last submenu screen viewed within that main menu will be displayed.

OK Button:

For Digital Speedometer:

- Pushing the **OK** button changes units (mph or km/h).

For Screen Setup:

- **OK** button allows user to enter menus and submenus.
- Within each submenu layer, the **up** and **down** arrows will allow the user to select the item of interest.
- Pushing the **OK** button makes the selection and a confirmation screen will appear (returning the user to the 1st page of the submenu).
- Pushing the **left** arrow button will exit each submenu layer and return to the main menu.

For the Trip and Fuel Economy menus:

- Information is reset by pushing and holding the **OK** button.

Engine Oil Life Reset

Oil Change Required

Your vehicle is equipped with an engine oil change indicator system. The "Oil Change Required" message will display in the instrument cluster display for five seconds after a single chime has sounded, to indicate the next scheduled oil change interval. The engine oil change indicator system is duty cycle based, which means the engine oil change interval may fluctuate, dependent upon your personal driving style.

Unless reset, this message will continue to display each time you place the ignition in the ON/RUN position. To turn off the message temporarily, push and release the **OK** or arrow buttons. To reset the oil change indicator system (after performing the scheduled maintenance), refer to the following procedure.

Vehicles Equipped With Keyless Enter-N-Go — Ignition

Use the steering wheel instrument cluster display controls for the following procedure(s):

1. Without pressing the brake pedal, push the ENGINE START/STOP button and place the ignition in the ON/RUN position (do not start the engine).
2. Push and release the **down** arrow button to scroll downward through the main menu to "Vehicle Info."
3. Push and release the **right** arrow button to access the "Oil Life" screen.
4. Push and hold the **OK** button to reset oil life. If conditions are met, the gauge and numeric display will update to show 100%. If conditions are not met a popup message of "To reset oil life engine must be off with ignition in run" will be displayed (for five seconds), and the user will remain at the Oil Life screen.
5. Push and release the **up** or **down** arrow button to exit the submenu screen.

NOTE: If the indicator message illuminates when you start the vehicle, the oil change indicator system did not reset. If necessary, repeat this procedure.

Secondary Method Of Resetting Engine Oil Life

1. Without pressing the brake pedal, push the ENGINE START/STOP button and place the ignition to the ON/RUN position (do not start the engine).
2. Fully press the accelerator pedal, slowly, three times within ten seconds.
3. Without pushing the brake pedal, push the ENGINE START/STOP button once to return the ignition to the OFF/LOCK position.

NOTE: If the indicator message illuminates when you start the vehicle, the oil change indicator system did not reset. If necessary, repeat this procedure.

Instrument Cluster Display Selectable Menu Items

Push and release the **up** or **down** arrow button until the desired Selectable Menu item is displayed in the instrument cluster display.

Follow the Menu or submenu prompts as desired.

Speedometer

Push and release the **OK** button to toggle between MPH and km/h.

Vehicle Info

The Vehicle Info consists of the following submenu (pushing the **left** or **right** arrow button will allow you to scroll through the submenu):

- Tire Pressure Monitor
- Coolant Temperature
- Transmission Temperature
- Oil Temperature
- Oil Pressure
- Oil Life
- Battery Voltage
- AWD Status — If Equipped

Driver Assist

The Driver Assist menu provides the status and visuals about the Adaptive Cruise Control and LaneSense features. When they are both off the screen, the display will read "Adaptive Cruise Control (ACC) and LaneSense Off."

Adaptive Cruise Control (ACC) Feature — If Equipped

The instrument cluster display displays the current ACC system settings. The information displayed depends on ACC system status.

Push the Adaptive Cruise Control (ACC) ON/OFF button (located on the steering wheel) until one of the following displays in the instrument cluster display:

Adaptive Cruise Control Off

When ACC is deactivated, the display will read "Adaptive Cruise Control Off."

Adaptive Cruise Control Ready

When ACC is activated but the vehicle speed setting has not been selected, the display will read "Adaptive Cruise Control Ready."

Push the SET + or the SET- button (located on the steering wheel) and the following will display in the instrument cluster display:

ACC Set

When ACC is set, the set speed will display in the instrument cluster.

The ACC screen may display once again if any ACC activity occurs, which may include any of the following:

- Distance Setting Change
- System Cancel
- Driver Override
- System Off
- ACC Proximity Warning
- ACC Unavailable Warning

Refer to "Adaptive Cruise Control (ACC) — If Equipped" in "Starting And Operating" for further information.

LaneSense — If Equipped

The instrument cluster display displays the current LaneSense system settings. The information displayed depends on LaneSense system status. Push the LaneSense button (located on the center stack below the Uconnect display) until one of the following displays in the instrument cluster display:

- **LaneSense Off**
- When LaneSense is deactivated, the display will read "LaneSense Off."
- **LaneSense On**
- When LaneSense is activated, the display will read "LaneSense On."

Refer to "LaneSense — If Equipped" in "Starting And Operating" for further information.

Fuel Economy

Two submenu pages; one with Current Value (instantaneous calculation of the fuel economy) displayed and one without the Current Value displayed (toggle the **left** or **right** arrow button to select one):

- Current Fuel Economy (MPG, L/100 km, or km/L).
- Range To Empty (miles or km).
- Average Fuel Economy (MPG, L/100 km, or km/L).
- The Max and Min values will correspond to the particular engine requirements.
- Lower end of gauge will be displayed in an amber color and turn green as Fuel Economy improves.
- Hold the **OK** button to reset average fuel economy information.

Trip Info

Push and release the **up** or **down** arrow button until the Trip Menu item is displayed in the instrument cluster display. Toggle the **left** or **right** arrow button to select Trip A or Trip B. The Trip information will display the following:

- Distance – Shows the total distance (mi or km) traveled for Trip A or Trip B since the last reset.
- Average Fuel Economy – Shows the average fuel economy (MPG, L/100km or km/L) of Trip A or Trip B since the last reset.
- Elapsed Time – Shows the total elapsed time of travel since the last reset.

Hold the **OK** button to reset feature information.

Audio

This menu displays the Audio information of the currently playing audio source (e.g. FM radio).

Messages

This feature shows the number of stored warning messages, if any. Pushing the **right** or **left** arrow button will allow you to scroll through the stored messages.

Screen Setup

Push and release the **up** or **down** arrow button until the Screen Setup Menu displays in the instrument cluster display. Push and release the **OK** button to enter the submenus. The Screen Setup feature allows you to change what information is displayed in the instrument cluster as well as the location that information is displayed.

1. Upper Left
   - Compass (default)
   - Outside Temp.
   - Time
   - Range to Empty
   - Average (MPG, L/100 km, or km/L)
   - Current (MPG, L/100 km, or km/L)
   - Trip A Distance
   - Trip B Distance
   - None
2. Upper Right
   - Compass
   - Outside Temp (default)
   - Time
   - Range to Empty
   - Average (MPG, L/100 km, or km/L)
   - Current (MPG, L/100 km, or km/L)
   - Trip A Distance
   - Trip B Distance
   - None
3. Center
   - Menu Title (default)
   - Compass
   - Outside Temp.
   - Time
   - Range to Empty
   - Average (MPG, L/100 km, or km/L)
   - Current (MPG, L/100 km, or km/L)
   - Trip A Distance
   - Trip B Distance
   - Audio Information
   - Digital Speed
   - None
4. Current Gear
   - On
   - Off (default)

5. Odometer
   - Show (default)
   - Hide
6. Fuel Gauge
   - Standard (default)
   - Detailed
7. Restore Default
   - Ok
   - Cancel

Battery Saver On/Battery Saver Mode Message — Electrical Load Reduction Actions — If Equipped

This vehicle is equipped with an Intelligent Battery Sensor (IBS) to perform additional monitoring of the electrical system and status of the vehicle battery.

In cases when the IBS detects charging system failure, or the vehicle battery conditions are deteriorating, electrical load reduction actions will take place to extend the driving time and distance of the vehicle. This is done by reducing power to or turning off non-essential electrical loads.

Load reduction is only active when the engine is running. It will display a message if there is a risk of battery depletion to the point where the vehicle may stall due to lack of electrical supply, or will not restart after the current drive cycle.

When load reduction is activated, the message "Battery Saver On" or "Battery Saver Mode" will appear in the instrument cluster.

These messages indicate the vehicle battery has a low state of charge and continues to lose electrical charge at a rate that the charging system cannot sustain.

NOTE:

- The charging system is independent from load reduction. The charging system performs a diagnostic on the charging system continuously.
- If the Battery Charge Warning Light is on it may indicate a problem with the charging system. Refer to "Battery Charge Warning Light" in "Getting To Know Your Instrument Panel" for further information.

The electrical loads that may be switched off (if equipped), and vehicle functions which can be affected by load reduction:

- Heated Seat/Vented Seats/Heated Wheel
- Heated/Cooled Cup Holders — If Equipped

- Rear Defroster And Heated Mirrors
- HVAC System
- 115V AC Power Inverter System
- Audio and Telematics System

Loss of the battery charge may indicate one or more of the following conditions:

- The charging system cannot deliver enough electrical power to the vehicle system because the electrical loads are larger than the capability of the charging system. The charging system is still functioning properly.
- Turning on all possible vehicle electrical loads (e.g. HVAC to max settings, exterior and interior lights, overloaded power outlets +12V, 115V AC, USB ports) during certain driving conditions (city driving, towing, frequent stopping).
- Installing options like additional lights, upfitter electrical accessories, audio systems, alarms and similar devices.
- Unusual driving cycles (short trips separated by long parking periods).
- The vehicle was parked for an extended period of time (weeks, months).
- The battery was recently replaced and was not charged completely.
- The battery was discharged by an electrical load left on when the vehicle was parked.
- The battery was used for an extended period with the engine not running to supply radio, lights, chargers, +12V portable appliances like vacuum cleaners, game consoles and similar devices.

What to do when an electrical load reduction action message is present ("Battery Saver On" or "Battery Saver Mode")

During a trip:

- Reduce power to unnecessary loads if possible:
  - Turn off redundant lights (interior or exterior)
  - Check what may be plugged in to power outlets +12V, 115V AC, USB ports
  - Check HVAC settings (blower, temperature)
  - Check the audio settings (volume)

After a trip:

- Check if any aftermarket equipment was installed (additional lights, upfitter electrical accessories, audio systems, alarms) and review specifications if any (load and Ignition Off Draw currents).
- Evaluate the latest driving cycles (distance, driving time and parking time).
- The vehicle should have service performed if the message is still present during consecutive trips and the evaluation of the vehicle and driving pattern did not help to identify the cause.

WARNING LIGHTS AND MESSAGES

The warning/indicator lights will illuminate in the instrument panel together with a dedicated message and/or acoustic signal when applicable. These indications are indicative and precautionary and as such must not be considered as exhaustive. Always refer to the information in this chapter in the event of a failure indication. All active telltales will display first if applicable. The system check menu may appear different based upon equipment options and current vehicle status. Some telltales are optional and may not appear.

Red Warning Lights

— Air Bag Warning Light

This warning light will illuminate to indicate a fault with the air bag, and will turn on for four to eight seconds as a bulb check when the ignition is placed in the ON/RUN or ACC/ON/RUN position. This light will illuminate with a single chime when a fault with the air bag has been detected, it will stay on until the fault is cleared. If the light is either not on during startup, stays on, or turns on while driving, have the system inspected at an authorized dealer as soon as possible.

BRAKE — Brake Warning Light

This warning light monitors various brake functions, including brake fluid level and parking brake application. If the brake light turns on it may indicate that the parking brake is applied, that the brake fluid level is low, or that there is a problem with the anti-lock brake system reservoir.

If the light remains on when the parking brake has been disengaged, and the fluid level is at the full mark on the master cylinder reservoir, it indicates a possible brake hydraulic system malfunction or that a problem with the Brake Booster has been detected by the Anti-Lock Brake System (ABS) / Electronic Stability Control (ESC) system. In this case, the light will remain on until the condition has been corrected. If the problem is related to the brake booster, the ABS pump will run when applying the brake, and a brake pedal pulsation may be felt during each stop.

The dual brake system provides a reserve braking capacity in the event of a failure to a portion of the hydraulic system. A leak in either half of the dual brake system is indicated by the Brake Warning Light, which will turn on when the brake fluid level in the master cylinder has dropped below a specified level.

The light will remain on until the cause is corrected.

NOTE: The light may flash momentarily during sharp cornering maneuvers, which change fluid level conditions. The vehicle should have service performed, and the brake fluid level checked.

If brake failure is indicated, immediate repair is necessary.

WARNING!

Driving a vehicle with the red brake light on is dangerous. Part of the brake system may have failed. It will take longer to stop the vehicle. You could have a collision. Have the vehicle checked immediately.

Vehicles equipped with the Anti-Lock Brake System (ABS) are also equipped with Electronic Brake Force Distribution (EBD). In the event of an EBD failure, the Brake Warning Light will turn on along with the ABS Light. Immediate repair to the ABS system is required.

Operation of the Brake Warning Light can be checked by turning the ignition switch from the OFF position to the ON/RUN position. The light should illuminate for approximately two seconds. The light should then turn off unless the parking brake is applied or a brake fault is detected. If the light does not illuminate, have the light inspected by an authorized dealer.

The light also will turn on when the parking brake is applied with the ignition switch in the ON/RUN position.

NOTE: This light shows only that the parking brake is applied. It does not show the degree of brake application.

— Battery Charge Warning Light

This warning light will illuminate when the battery is not charging properly. If it stays on while the engine is running, there may be a malfunction with the charging system. Contact an authorized dealer as soon as possible.

This indicates a possible problem with the electrical system or a related component.

— Door Open Warning Light

This indicator will illuminate when a door is ajar/open and not fully closed.

NOTE: If the vehicle is moving, there will also be a single chime.

— Electric Power Steering Fault Warning Light

This warning light will turn on when there's a fault with the EPS (Electric Power Steering) system. Refer to "Power Steering" in "Starting And Operating" for further information.

WARNING!

Continued operation with reduced assist could pose a safety risk to yourself and others. Service should be obtained as soon as possible.

— Electronic Throttle Control (ETC) Warning Light

This warning light will illuminate to indicate a problem with the Electronic Throttle Control (ETC) system. If a problem is detected while the vehicle is running, the light will either stay on or flash depending on the nature of the problem. Cycle the ignition when the vehicle is safely and completely stopped and the transmission is placed in the PARK position. The light should turn off. If the light remains on with the vehicle running, your vehicle will usually be drivable; however, see an authorized dealer for service as soon as possible.

NOTE: This light may turn on if the accelerator and brake pedals are pressed at the same time.

If the light continues to flash when the vehicle is running, immediate service is required and you may experience reduced performance, an elevated/rough idle, or engine stall and your vehicle may require towing. The light will come on when the ignition is placed in the ON/RUN or ACC/ON/RUN position and remain on briefly as a bulb check. If the light does not come on during starting, have the system checked by an authorized dealer.

— Engine Coolant Temperature Warning Light

This warning light warns of an overheated engine condition. If the engine coolant temperature is too high, this indicator will illuminate and a single chime will sound. If the temperature reaches the upper limit, a continuous chime will sound for four minutes or until the engine is able to cool: whichever comes first.

If the light turns on while driving, safely pull over and stop the vehicle. If the A/C system is on, turn it off. Also, shift the transmission into NEUTRAL and idle the vehicle. If the temperature reading does not return to normal, turn the engine off immediately and call for service.

Refer to “If Your Engine Overheats” in “In Case Of Emergency” for further information.

— Oil Pressure Warning Light

This warning light will illuminate to indicate low engine oil pressure. If the light turns on while driving, stop the vehicle, shut off the engine as soon as possible, and contact an authorized dealer. A chime will sound when this light turns on.

Do not operate the vehicle until the cause is corrected. This light does not indicate how much oil is in the engine. The engine oil level must be checked under the hood.

— Oil Temperature Warning Light

This warning light will illuminate to indicate the engine oil temperature is high. If the light turns on while driving, stop the vehicle and shut off the engine as soon as possible. Wait for oil temperature to return to normal levels.

— Seat Belt Reminder Warning Light

This warning light indicates when the driver or passenger seat belt is unbuckled. When the ignition is first placed in the ON/RUN or ACC/ON/RUN position and if the driver’s seat belt is unbuckled, a chime will sound and the light will turn on. When driving, if the driver or front passenger seat belt remains unbuckled, the Seat Belt Reminder Light will flash or remain on continuously and a chime will sound.

Refer to "Occupant Restraint Systems" in "Safety" for further information.

— Transmission Temperature Warning Light — If Equipped

This warning light will illuminate to warn of a high transmission fluid temperature. This may occur with strenuous usage such as trailer towing. If this light turns on, stop the vehicle and run the engine at idle or slightly faster, with the transmission in PARK or NEUTRAL, until the light turns off. Once the light turns off, you may continue to drive normally.

WARNING!

If you continue operating the vehicle when the Transmission Temperature Warning Light is illuminated you could cause the fluid to boil over, come in contact with hot engine or exhaust components and cause a fire.

CAUTION!

Continuous driving with the Transmission Temperature Warning Light illuminated will eventually cause severe transmission damage or transmission failure.

— Trunk Open Warning Light

This indicator will illuminate when the trunk is open and not fully closed.

NOTE: If the vehicle is moving, there will also be a single chime.

— Vehicle Security Warning Light — If Equipped

This light will flash at a fast rate for approximately 15 seconds when the vehicle security alarm is arming, and then will flash slowly until the vehicle is disarmed.

Yellow Warning Lights

— Engine Check/Malfunction Indicator Warning Light (MIL)

The Engine Check/Malfunction Indicator Light (MIL) is a part of an Onboard Diagnostic System called OBD II that monitors engine and automatic transmission control systems. This warning light will illuminate when the ignition is in the ON/RUN position before engine start. If the bulb does not come on when turning the ignition switch from OFF to ON/RUN, have the condition checked promptly.

Certain conditions, such as a loose or missing gas cap, poor quality fuel, etc., may illuminate the light after engine start. The vehicle should be serviced if the light stays on through several typical driving styles. In most situations, the vehicle will drive normally and will not require towing.

When the engine is running, the MIL may flash to alert serious conditions that could lead to immediate loss of power or severe catalytic converter damage. The vehicle should be serviced by an authorized dealer as soon as possible if this occurs.

WARNING!

A malfunctioning catalytic converter, as referenced above, can reach higher temperatures than in normal operating conditions. This can cause a fire if you drive slowly or park over flammable substances such as dry plants, wood, cardboard, etc. This could result in death or serious injury to the driver, occupants or others.

CAUTION!

Prolonged driving with the Malfunction Indicator Light (MIL) on could cause damage to the vehicle control system. It also could affect fuel economy and driveability. If the MIL is flashing, severe catalytic converter damage and power loss will soon occur. Immediate service is required.

— Electronic Stability Control (ESC) Active Warning Light — If Equipped

This warning light will indicate when the Electronic Stability Control system is Active. The "ESC Indicator Light" in the instrument cluster will come on when the ignition is placed in the ON/RUN or ACC/ON/RUN position, and when ESC is activated. It should go out with the engine running. If the "ESC Indicator Light" comes on continuously with the engine running, a malfunction has been detected in the ESC system. If this warning light remains on after several ignition cycles, and the vehicle has been driven several miles (kilometers) at speeds greater than 30 mph (48 km/h), see an authorized dealer as soon as possible to have the problem diagnosed and corrected.

- The “ESC Off Indicator Light” and the “ESC Indicator Light” come on momentarily each time the ignition is placed in the ON/RUN or ACC/ON/RUN position.
- The ESC system will make buzzing or clicking sounds when it is active. This is normal; the sounds will stop when ESC becomes inactive.
- This light will come on when the vehicle is in an ESC event.

— Electronic Stability Control (ESC) Off Warning Light — If Equipped

This warning light indicates the Electronic Stability Control (ESC) is off.

Each time the ignition is turned to ON/RUN or ACC/ON/RUN, the ESC system will be on, even if it was turned off previously.

— Low Washer Fluid Warning Light — If Equipped

This warning light will illuminate when the windshield washer fluid is low.

— Tire Pressure Monitoring System (TPMS) Warning Light

The warning light switches on and a message is displayed to indicate that the tire pressure is lower than the recommended value and/or that slow pressure loss is occurring. In these cases, optimal tire duration and fuel consumption may not be guaranteed.

Should one or more tires be in the condition mentioned above, the display will show the indications corresponding to each tire.

CAUTION!

Do not continue driving with one or more flat tires as handling may be compromised. Stop the vehicle, avoiding sharp braking and steering. If a tire puncture occurs, repair immediately using the dedicated tire repair kit and contact an authorized dealer as soon as possible.

Each tire, including the spare (if provided), should be checked monthly when cold and inflated to the inflation pressure recommended by the vehicle manufacturer on the vehicle placard or tire inflation pressure label. (If your vehicle has tires of a different size than the size indicated on the vehicle placard or tire inflation pressure label, you should determine the proper tire inflation pressure for those tires.)

As an added safety feature, your vehicle has been equipped with a Tire Pressure Monitoring System (TPMS) that illuminates a low tire pressure telltale when one or more of your tires is significantly under-inflated. Accordingly, when the low tire pressure telltale illuminates, you should stop and check your tires as soon as possible, and inflate them to the proper pressure. Driving on a significantly under-inflated tire causes the tire to overheat and can lead to tire failure. Under-inflation also reduces fuel efficiency and tire tread life, and may affect the vehicle's handling and stopping ability.

Please note that the TPMS is not a substitute for proper tire maintenance, and it is the driver's responsibility to maintain correct tire pressure, even if under-inflation has not reached the level to trigger illumination of the TPMS low tire pressure telltale.

Your vehicle has also been equipped with a TPMS malfunction indicator to indicate when the system is not operating properly. The TPMS malfunction indicator is combined with the low tire pressure telltale. When the system detects a malfunction, the telltale will flash for approximately one minute and then remain continuously illuminated. This sequence will continue upon subsequent vehicle start-ups as long as the malfunction exists. When the malfunction indicator is illuminated, the system may not be able to detect or signal low tire pressure as intended. TPMS malfunctions may occur for a variety of reasons, including the installation of replacement or alternate tires or wheels on the vehicle that prevent the TPMS from functioning properly. Always check the TPMS malfunction telltale after replacing one or more tires or wheels on your vehicle to ensure that the replacement or alternate tires and wheels allow the TPMS to continue to function properly.

CAUTION!

The TPMS has been optimized for the original equipment tires and wheels. TPMS pressures and warning have been established for the tire size equipped on your vehicle. Undesirable system operation or sensor

(Continued)

CAUTION! ***(Continued)***

damage may result when using replacement equipment that is not of the same size, type, and/or style. Aftermarket wheels can cause sensor damage. Using aftermarket tire sealants may cause the Tire Pressure Monitoring System (TPMS) sensor to become inoperable. After using an aftermarket tire sealant it is recommended that you take your vehicle to your authorized dealer to have your sensor function checked.

— Low Fuel Warning Light

When the fuel level reaches approximately 1.9 gal (7.13 L), this light will turn on and a single chime will sound.

— Anti-Lock Brake (ABS) Warning Light

This warning light monitors the Anti-Lock Brake System (ABS). The light will turn on when the ignition is placed in the ON/RUN or ACC/ON/RUN position and may stay on for as long as four seconds.

If the ABS light remains on or turns on while driving, then the Anti-Lock portion of the brake system is not functioning and service is required as soon as possible. However, the conventional brake system will continue to operate normally, assuming the Brake Warning Light is not also on.

If the ABS light does not turn on when the ignition is placed in the ON/RUN or ACC/ON/RUN position, have the brake system inspected by an authorized dealer.

— Service Forward Collision Warning (FCW) Light — If Equipped

This warning light will illuminate to indicate a fault in the Forward Collision Warning System. Contact an authorized dealer for service.

Refer to "Forward Collision Warning (FCW)" in "Safety" for further information.

SERV AWD — Service AWD Warning Light — If Equipped

This telltale will turn on to indicate the All Wheel Drive (AWD) system is not functioning properly and that service is required. Contact your authorized dealer.

— LaneSense Warning Light — If Equipped

The LaneSense system provides the driver with visual and steering torque warnings when the vehicle starts to drift out of its lane unintentionally without the use of a turn signal.

- When the LaneSense system senses a lane drift situation, the LaneSense indicator changes from solid green to solid yellow.

- When the LaneSense system senses the lane has been approached and is in a lane departure situation, the LaneSense indicator changes from solid white/green to flashing yellow.
- Refer to "LaneSense – If Equipped" in "Starting And Operating" for further information.

— Service LaneSense Warning Light — If Equipped

This warning light will illuminate when the LaneSense system is not operating and requires service. Please see an authorized dealer.

— Service Adaptive Cruise Control Warning Light — If Equipped

This light will turn on when a ACC is not operating and needs service. Refer to "Adaptive Cruise Control (ACC)" in "Starting And Operating" for further information.

Yellow Indicator Lights

— Forward Collision Warning Off Indicator Light — If Equipped

This indicator light illuminates to indicate that Forward Collision Warning is off.

Green Indicator Lights

— ECO Mode Indicator Light

This light will turn on when ECO Mode is active.

— Adaptive Cruise Control (ACC) Set With Target Vehicle Light — If Equipped

This will display when the ACC is set and a target vehicle is detected. Refer to "Adaptive Cruise Control (ACC)" in "Starting And Operating" for further information.

— Adaptive Cruise Control (ACC) Set Without Target Vehicle Light — If Equipped

This will display the distance setting for the ACC system when the system is engaged. Refer to "Adaptive Cruise Control (ACC)" in "Starting And Operating" for further information.

— Cruise Control Set Indicator Light — If Equipped

This indicator light will illuminate when the cruise control is set to the desired speed. Refer to "Speed Control" in "Starting And Operating" for further information.

— Front Fog Indicator Light — If Equipped

This indicator light will illuminate when the front fog lights are on.

— LaneSense Indicator Light — If Equipped

The LaneSense indicator light illuminates solid green when both lane markings have been detected and the system is "armed" and ready to provide visual and torque warnings if an unintentional lane departure occurs.

Refer to "LaneSense — If Equipped" in "Starting And Operating" for further information.

— Park/Headlight On Indicator Light

This indicator light will illuminate when the park lights or headlights are turned on.

— Turn Signal Indicator Lights

When the left or right turn signal is activated, the turn signal indicator will flash independently and the corresponding exterior turn signal lamps will flash. Turn signals can be activated when the multifunction lever is moved down (left) or up (right).

NOTE:

- A continuous chime will sound if the vehicle is driven more than 1 mile (1.6 km) with either turn signal on.
- Check for an inoperative outside light bulb if either indicator flashes at a rapid rate.

White Indicator Lights

— Adaptive Cruise Control (ACC) Ready Light — If Equipped

This light will turn on when Adaptive Cruise Control (ACC) has been turned on, but is not set. Refer to "Adaptive Cruise Control (ACC)" in "Starting And Operating" for further information.

— Cruise Control Ready Indicator

This indicator light will illuminate when the cruise control is ready, but not set. Refer to "Speed Control" in "Starting And Operating" for further information.

— LaneSense Indicator Light — If Equipped

When the LaneSense system is ON, but not armed, the LaneSense indicator light illuminates solid white. This occurs when only left, right, or neither lane line has been detected. If a single lane line is detected, the system is ready to provide only visual warnings if an unintentional lane departure occurs on the detected lane line.

Refer to "LaneSense — If Equipped" in "Starting And Operating" for further information.

Blue Indicator Lights

— High Beam Indicator Light

This indicator light will illuminate to indicate that the high beam headlights are on. With the low beams activated, push the multifunction lever forward (toward the front of the vehicle) to turn on the high beams. Pull the multifunction lever rearward (toward the rear of the vehicle) to turn off the high beams. If the high beams are off, pull the lever toward you for a temporary high beam on, "flash to pass" scenario.

ONBOARD DIAGNOSTIC SYSTEM — OBD II

Your vehicle is equipped with a sophisticated Onboard Diagnostic system called OBD II. This system monitors the performance of the emissions, engine, and transmission control systems. When these systems are operating properly, your vehicle will provide excellent performance and fuel economy, as well as engine emissions well within current government regulations.

If any of these systems require service, the OBD II system will turn on the Malfunction Indicator Light (MIL). It will also store diagnostic codes and other information to assist your service technician in making repairs. Although your vehicle will usually be drivable and not need towing, see an authorized dealer for service as soon as possible.

CAUTION!

- **Prolonged driving with the MIL on could cause further damage to the emission control system. It could also affect fuel economy and driveability. The vehicle must be serviced before any emissions tests can be performed.**

(Continued)

CAUTION! *(Continued)*

- **If the MIL is flashing while the vehicle is running, severe catalytic converter damage and power loss will soon occur. Immediate service is required.**

Onboard Diagnostic System (OBD II) Cybersecurity

Your vehicle is required to have an Onboard Diagnostic system (OBD II) and a connection port to allow access to information related to the performance of your emissions controls. Authorized service technicians may need to access this information to assist with the diagnosis and service of your vehicle and emissions system.

WARNING!

- **ONLY an authorized service technician should connect equipment to the OBD II connection port in order to read the VIN, diagnose, or service your vehicle.**
- **If unauthorized equipment is connected to the OBD II connection port, such as a driver-behavior tracking device, it may:**

(Continued)

WARNING! *(Continued)*

- **Be possible that vehicle systems, including safety related systems, could be impaired or a loss of vehicle control could occur that may result in an accident involving serious injury or death.**
- **Access, or allow others to access, information stored in your vehicle systems, including personal information.**

For further information, refer to “Cybersecurity” in “Multimedia”.

EMISSIONS INSPECTION AND MAINTENANCE PROGRAMS

In some localities, it may be a legal requirement to pass an inspection of your vehicle’s emissions control system. Failure to pass could prevent vehicle registration.

For states that require an Inspection and Maintenance (I/M), this check verifies the “Malfunction Indicator Light (MIL)” is functioning and is not on when the engine is running, and that the OBD II system is ready for testing.

Normally, the OBD II system will be ready. The OBD II system may **not** be ready if your vehicle was recently serviced, recently had a dead battery or a battery replacement. If the OBD II system should be determined not ready for the I/M test, your vehicle may fail the test.

Your vehicle has a simple ignition actuated test, which you can use prior to going to the test station. To check if your vehicle's OBD II system is ready, you must do the following:

1. Cycle the ignition switch to the ON position, but do not crank or start the engine.

NOTE: If you crank or start the engine, you will have to start this test over.

2. As soon as you cycle the ignition switch to the ON position, you will see the "Malfunction Indicator Light (MIL)" symbol come on as part of a normal bulb check.
3. Approximately 15 seconds later, one of two things will happen:

- The MIL will flash for about ten seconds and then return to being fully illuminated until you turn OFF the ignition or start the engine. This means that your vehicle's OBD II system is **not ready** and you should **not** proceed to the I/M station.
- The MIL will not flash at all and will remain fully illuminated until you place the ignition in the off position or start the engine. This means that your vehicle's OBD II system is **ready** and you can proceed to the I/M station.

If your OBD II system is **not ready,** you should see an authorized dealer or repair facility. If your vehicle was recently serviced or had a battery failure or replacement, you may need to do nothing more than drive your vehicle as you normally would in order for your OBD II system to update. A recheck with the above test routine may then indicate that the system is **now ready**.

Regardless of whether your vehicle's OBD II system is ready or not, if the MIL is illuminated during normal vehicle operation you should have your vehicle serviced before going to the I/M station. The I/M station can fail your vehicle because the MIL is on with the engine running.

SAFETY

CONTENTS

■ SAFETY FEATURES 146

- □ Anti-Lock Brake System (ABS) 146
- □ Electronic Brake Control System (EBC) 147

■ AUXILIARY DRIVING SYSTEMS 156

- □ Blind Spot Monitoring (BSM) — If Equipped . . .156
- □ Forward Collision Warning (FCW) With Mitigation Operation 163
- □ Tire Pressure Monitoring System (TPMS) 166

■ OCCUPANT RESTRAINT SYSTEMS 172

- □ Occupant Restraint Systems Features 172
- □ Important Safety Precautions 172
- □ Seat Belt Systems 174
- □ Supplemental Restraint Systems (SRS) 184
- □ Child Restraints 197
- □ Transporting Pets 212

■ SAFETY TIPS 212

- □ Transporting Passengers 212
- □ Exhaust Gas 212
- □ Safety Checks You Should Make Inside The Vehicle 213
- □ Periodic Safety Checks You Should Make Outside The Vehicle 215

SAFETY FEATURES

Anti-Lock Brake System (ABS)

The Anti-Lock Brake System (ABS) provides increased vehicle stability and brake performance under most braking conditions. The system automatically prevents wheel lock, and enhances vehicle control during braking.

The ABS performs a self-check cycle to ensure that the ABS is working properly each time the vehicle is started and driven. During this self-check, you may hear a slight clicking sound as well as some related motor noises.

ABS is activated during braking when the system detects one or more wheels begin to lock. Road conditions such as ice, snow, gravel, bumps, railroad tracks, loose debris, or panic stops may increase the likelihood of ABS activation(s).

You also may experience the following when ABS activates:

- The ABS motor noise (it may continue to run for a short time after the stop).
- The clicking sound of solenoid valves.
- Brake pedal pulsations.
- A slight drop of the brake pedal at the end of the stop.

These are all normal characteristics of ABS.

WARNING!

- **The ABS contains sophisticated electronic equipment that may be susceptible to interference caused by improperly installed or high output radio transmitting equipment. This interference can cause possible loss of anti-lock braking capability. Installation of such equipment should be performed by qualified professionals.**
- **Pumping of the Anti-Lock Brakes will diminish their effectiveness and may lead to a collision. Pumping makes the stopping distance longer. Just press firmly on your brake pedal when you need to slow down or stop.**
- **The ABS cannot prevent the natural laws of physics from acting on the vehicle, nor can it increase braking or steering efficiency beyond that afforded by the condition of the vehicle brakes and tires or the traction afforded.**
- **The ABS cannot prevent collisions, including those resulting from excessive speed in turns, following another vehicle too closely, or hydroplaning.**

(Continued)

WARNING! *(Continued)*

- **The capabilities of an ABS equipped vehicle must never be exploited in a reckless or dangerous manner that could jeopardize the user's safety or the safety of others.**

ABS is designed to function with the OEM tires. Modification may result in degraded ABS performance.

Anti-Lock Brake Warning Light

The yellow "Anti-Lock Brake Warning Light" will turn on when the ignition is turned to the ON/RUN mode and may stay on for as long as four seconds.

If the "Anti-Lock Brake Warning Light" remains on or comes on while driving, it indicates that the anti-lock portion of the brake system is not functioning and that service is required. However, the conventional brake system will continue to operate normally if the "Anti-Lock Brake Warning Light" is on.

If the "Anti-Lock Brake Warning Light" is on, the brake system should be serviced as soon as possible to restore the benefits of anti-lock brakes. If the "Anti-Lock Brake Warning Light" does not come on when the ignition is turned to the ON/RUN mode, have the light repaired as soon as possible.

Electronic Brake Control System (EBC)

Your vehicle is equipped with an advanced Electronic Brake Control system (EBC). This system includes Electronic Brake Force Distribution (EBD), Anti-Lock Brake System (ABS), Brake Assist System (BAS), Hill Start Assist (HSA), Traction Control System (TCS), Electronic Stability Control (ESC), and Electronic Roll Mitigation (ERM). These systems work together to enhance both vehicle stability and control in various driving conditions.

Your vehicle may also be equipped with Ready Alert Braking (RAB), and Rain Brake Support (RBS).

Brake Assist System (BAS)

The BAS is designed to optimize the vehicle's braking capability during emergency braking maneuvers. The system detects an emergency braking situation by sensing the rate and amount of brake application and then applies optimum pressure to the brakes. This can help reduce braking distances. The BAS complements the anti-lock brake system (ABS). Applying the brakes very quickly results in the best BAS assistance. To receive the benefit of the system, you must apply continuous braking pressure during the stopping sequence, (do not "pump" the brakes).

Do not reduce brake pedal pressure unless braking is no longer desired. Once the brake pedal is released, the BAS is deactivated.

WARNING!

The Brake Assist System (BAS) cannot prevent the natural laws of physics from acting on the vehicle, nor can it increase the traction afforded by prevailing road conditions. BAS cannot prevent collisions, including those resulting from excessive speed in turns, driving on very slippery surfaces, or hydroplaning. The capabilities of a BAS-equipped vehicle must never be exploited in a reckless or dangerous manner, which could jeopardize the user's safety or the safety of others.

Brake System Warning Light

The red "Brake System Warning Light" will turn on when the ignition is turned to the ON/RUN mode and may stay on for as long as four seconds.

If the "Brake System Warning Light" remains on or comes on while driving, it indicates that the brake system is not functioning properly and that immediate service is required. If the "Brake System Warning Light" does not come on when the ignition is turned to the ON/RUN mode, have the light repaired as soon as possible.

Electronic Brake Force Distribution (EBD)

This function manages the distribution of the braking torque between the front and rear axles by limiting braking pressure to the rear axle. This is done to prevent overslip of the rear wheels to avoid vehicle instability, and to prevent the rear axle from entering ABS before the front axle.

Electronic Roll Mitigation (ERM)

This system anticipates the potential for wheel lift by monitoring the driver's steering wheel input and the speed of the vehicle. When ERM determines that the rate of change of the steering wheel angle and vehicle's speed are sufficient to potentially cause wheel lift, it then applies the appropriate brake and may also reduce engine power to lessen the chance that wheel lift will occur. ERM can only reduce the chance of wheel lift occurring during severe or evasive driving maneuvers; it cannot prevent wheel lift due to other factors, such as road conditions, leaving the roadway, or striking objects or other vehicles.

NOTE: ERM is disabled anytime the ESC is in "Full Off" mode (if equipped). Refer to "Electronic Stability Control (ESC)" in this section for a complete explanation of the available ESC modes.

WARNING!

Many factors, such as vehicle loading, road conditions and driving conditions, influence the chance that wheel lift or rollover may occur. ERM cannot prevent all wheel lift or roll overs, especially those that involve leaving the roadway or striking objects or other vehicles. The capabilities of an ERM-equipped vehicle must never be exploited in a reckless or dangerous manner which could jeopardize the user's safety or the safety of others.

Electronic Stability Control (ESC)

This system enhances directional control and stability of the vehicle under various driving conditions. ESC corrects for oversteering or understeering of the vehicle by applying the brake of the appropriate wheel(s) to assist in counteracting the oversteer or understeer condition. Engine power may also be reduced to help the vehicle maintain the desired path.

ESC uses sensors in the vehicle to determine the vehicle path intended by the driver and compares it to the actual path of the vehicle. When the actual path does not match the intended path, ESC applies the brake of the appropriate wheel to assist in counteracting the oversteer or understeer condition.

- Oversteer — when the vehicle is turning more than appropriate for the steering wheel position.
- Understeer — when the vehicle is turning less than appropriate for the steering wheel position.

The "ESC Activation/Malfunction Indicator Light" located in the instrument cluster will start to flash as soon as the ESC system becomes active. The "ESC Activation/Malfunction Indicator Light" also flashes when the TCS is active. If the "ESC Activation/Malfunction Indicator Light" begins to flash during acceleration, ease up on the accelerator and apply as little throttle as possible. Be sure to adapt your speed and driving to the prevailing road conditions.

WARNING!

- **Electronic Stability Control (ESC) cannot prevent the natural laws of physics from acting on the vehicle, nor can it increase the traction afforded by prevailing road conditions. ESC cannot prevent accidents, including those resulting from excessive speed in turns, driving on very slippery surfaces, or hydroplaning. ESC also cannot prevent accidents resulting from loss of vehicle control due to inappropriate driver input for the conditions. Only a safe, attentive, and skillful driver can prevent accidents. The capabilities of an ESC equipped vehicle must never be exploited in a reckless or dangerous manner which could jeopardize the user's safety or the safety of others.**
- **Vehicle modifications, or failure to properly maintain your vehicle, may change the handling characteristics of your vehicle, and may negatively affect the performance of the ESC system. Changes to the steering system, suspension, braking system, tire type and size or wheel size may adversely affect ESC performance. Improperly inflated and unevenly worn tires may also degrade ESC performance. Any**

(Continued)

WARNING! *(Continued)*

vehicle modification or poor vehicle maintenance that reduces the effectiveness of the ESC system can increase the risk of loss of vehicle control, vehicle rollover, personal injury and death.

ESC Operating Modes

NOTE: Depending upon model and mode of operation, the ESC system may have multiple operating modes.

ESC On

This is the normal operating mode for the ESC. Whenever the vehicle is started, the ESC system will be in this mode. This mode should be used for most driving conditions. Alternate ESC modes should only be used for specific reasons as noted in the following paragraphs.

Partial Off

The "Partial Off" mode is intended for times when a more spirited driving experience is desired. This mode may modify TCS and ESC thresholds for activation, which allows for more wheel spin than normally allowed. This mode may be useful if the vehicle becomes stuck.

To enter the "Partial Off" mode, momentarily push the "ESC Off" switch and the "ESC Off Indicator Light" will illuminate. To turn the ESC on again, momentarily push the "ESC Off" switch and the "ESC Off Indicator Light" will turn off.

WARNING!

When in "Partial Off" mode, the TCS functionality of ESC, (except for the limited slip feature described in the TCS section), has been disabled and the "ESC Off Indicator Light" will be illuminated. When in "Partial Off" mode, the engine power reduction feature of TCS is disabled, and the enhanced vehicle stability offered by the ESC system is reduced.

NOTE:

- For vehicles with multiple partial ESC modes a momentary button push will toggle the ESC mode. Multiple momentary button pushed may be required to return to ESC On.
- Trailer Sway control (TSC) is disabled when the ESC system is in the "Partial Off" mode.
- If Equipped — "ESC Sport" and "ESC Track" are ESC partial off mode(s).

Full Off – If Equipped

This mode is intended for off-highway or off-road use only and should not be used on any public roadways. In this mode, TCS and ESC features are turned OFF. To enter the "Full Off" mode, push and hold the "ESC Off" switch for five seconds while the vehicle is stopped with the engine running. After five seconds, a chime will sound, the "ESC Off Indicator Light" will illuminate, and the "ESC OFF" message will display in the instrument cluster. To turn ESC ON again, momentarily push the "ESC Off" switch.

WARNING!

- **In the ESC "Full Off" mode, the engine torque reduction and stability features are disabled. Therefore, enhanced vehicle stability offered by the ESC system is unavailable. In an emergency evasive maneuver, the ESC system will not engage to assist in maintaining stability. ESC "Full Off" mode is intended for off-highway or off-road use only.**

(Continued)

WARNING! ***(Continued)***

- **The Electronic Stability Control (ESC) cannot prevent the natural laws of physics from acting on the vehicle, nor can it increase the traction afforded by prevailing road conditions. ESC cannot prevent all accidents, including those resulting from excessive speed in turns, driving on very slippery surfaces, or hydroplaning. ESC also cannot prevent collisions.**

ESC Activation/Malfunction Indicator Light And ESC OFF Indicator Light

The "ESC Activation/Malfunction Indicator Light" in the instrument cluster will come on when the ignition is turned to the ON mode. It should go out with the engine running. If the "ESC Activation/Malfunction Indicator Light" comes on continuously with the engine running, a malfunction has been detected in the ESC system. If this light remains on after several ignition cycles, and the vehicle has been driven several miles (kilometers) at speeds greater than 30 mph (48 km/h), see an authorized dealer as soon as possible to have the problem diagnosed and corrected.

The "ESC Activation/Malfunction Indicator Light" (located in the instrument cluster) starts to flash as soon as the tires lose traction and the ESC system becomes active. The "ESC Activation/Malfunction Indicator Light" also flashes when TCS is active. If the "ESC Activation/Malfunction Indicator Light" begins to flash during acceleration, ease up on the accelerator and apply as little throttle as possible. Be sure to adapt your speed and driving to the prevailing road conditions.

NOTE:

- The "ESC Activation/Malfunction Indicator Light" and the "ESC OFF Indicator Light" come on momentarily each time the ignition is turned ON.
- Each time the ignition is turned ON, the ESC system will be on even if it was turned off previously.
- The ESC system will make buzzing or clicking sounds when it is active. This is normal; the sounds will stop when ESC becomes inactive following the maneuver that caused the ESC activation.

The "ESC OFF Indicator Light" indicates the customer has elected to have the Electronic Stability Control (ESC) in a reduced mode.

Hill Start Assist (HSA)

The HSA system is designed to mitigate roll back from a complete stop while on an incline. If the driver releases the brake while stopped on an incline, HSA will continue to hold the brake pressure for a short period. If the driver does not apply the throttle before this time expires, the system will release brake pressure and the vehicle will roll down the hill as normal.

The following conditions must be met in order for HSA to activate:

- The feature must be enabled.
- The vehicle must be stopped.
- Park brake must be off.
- Driver door must be closed.
- The vehicle must be on a sufficient grade.
- The gear selection must match vehicle uphill direction (i.e., vehicle facing uphill is in forward gear; vehicle backing uphill is in REVERSE gear).
- HSA will work in REVERSE gear and all forward gears. The system will not activate if the transmission is in PARK or NEUTRAL. For vehicles equipped with a manual transmission, if the clutch is pressed, HSA will remain active.

WARNING!

There may be situations where the Hill Start Assist (HSA) will not activate and slight rolling may occur, such as on minor hills or with a loaded vehicle, or while pulling a trailer. HSA is not a substitute for active driving involvement. It is always the driver's responsibility to be attentive to distance to other vehicles, people, and objects, and most importantly brake operation to ensure safe operation of the vehicle under all road conditions. Your complete attention is always required while driving to maintain safe control of your vehicle. Failure to follow these warnings can result in a collision or serious personal injury.

Towing With HSA

HSA will also provide assistance to mitigate roll back while towing a trailer.

WARNING!

- **If you use a trailer brake controller with your trailer, the trailer brakes may be activated and deactivated with the brake switch. If so, there may not be enough brake pressure to hold both the vehicle and the trailer on a hill when the brake pedal is released. In order to avoid rolling down an incline while resuming acceleration, manually activate the trailer brake or apply more vehicle brake pressure prior to releasing the brake pedal.**
- **HSA is not a parking brake. Always apply the parking brake fully when exiting your vehicle. Also, be certain to place the transmission in PARK.**
- **Failure to follow these warnings can result in a collision or serious personal injury.**

Disabling And Enabling HSA

This feature can be turned on or turned off. To change the current setting, proceed as follows:

- If disabling HSA using your instrument cluster display, refer to "Instrument Cluster Display" in "Getting To Know Your Instrument Panel" for further information.
- If disabling HSA using Uconnect Settings, refer to "Uconnect Settings" in "Multimedia" for further information.

For vehicles not equipped with an instrument cluster display, perform the following steps:

1. Center the steering wheel (front wheels pointing straight forward).
2. Shift the transmission into PARK.
3. Apply the parking brake.
4. Start the engine.
5. Rotate the steering wheel slightly more than one-half turn to the left.
6. Push the "ESC Off" button located in the lower switch bank below the climate control four times within 20 seconds. The "ESC Off Indicator Light" should turn on and turn off two times.
7. Rotate the steering wheel back to center and then an additional slightly more than one-half turn to the right.

8. Turn the ignition to the OFF mode and then back to ON. If the sequence was completed properly, the "ESC Off Indicator Light" will blink several times to confirm HSA is disabled.
9. Repeat these steps if you want to return this feature to its previous setting.

Rain Brake Support (RBS)

Rain Brake Support may improve braking performance in wet conditions. It will periodically apply a small amount of brake pressure to remove any water buildup on the front brake rotors. It functions when the windshield wipers are in LO or HI speed. When Rain Brake Support is active, there is no notification to the driver and no driver interaction is required.

Ready Alert Braking (RAB)

Ready Alert Braking may reduce the time required to reach full braking during emergency braking situations. It anticipates when an emergency braking situation may occur by monitoring how fast the throttle is released by the driver. The EBC will prepare the brake system for a panic stop.

Traction Control System (TCS)

This system monitors the amount of wheel spin of each of the driven wheels. If wheel spin is detected, the TCS may apply brake pressure to the spinning wheel(s) and/or reduce engine power to provide enhanced acceleration and stability. A feature of the TCS, Brake Limited Differential (BLD), functions similar to a limited slip differential and controls the wheel spin across a driven axle. If one wheel on a driven axle is spinning faster than the other, the system will apply the brake of the spinning wheel. This will allow more engine power to be applied to the wheel that is not spinning. BLD may remain enabled even if TCS and ESC are in a reduced mode.

AUXILIARY DRIVING SYSTEMS

Blind Spot Monitoring (BSM) — If Equipped

The Blind Spot Monitoring (BSM) system uses two radar sensors, located inside the rear bumper fascia, to detect highway licensable vehicles (automobiles, trucks, motorcycles, etc.) that enter the blind spot zones from the rear/front/side of the vehicle.

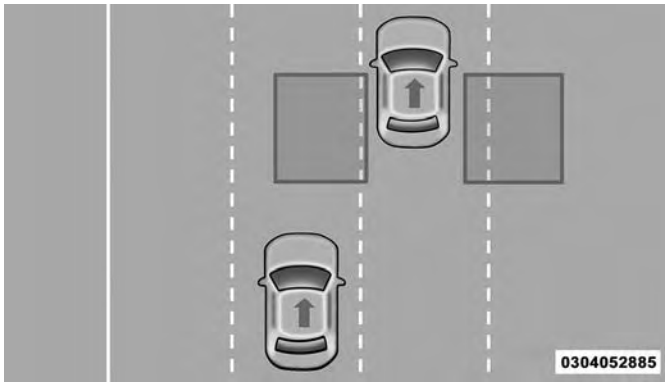

Rear Detection Zones

When the vehicle is started, the BSM warning light will momentarily illuminate in both outside rear view mirrors to let the driver know that the system is operational. The BSM system sensors operate when the vehicle is in any forward gear or REVERSE.

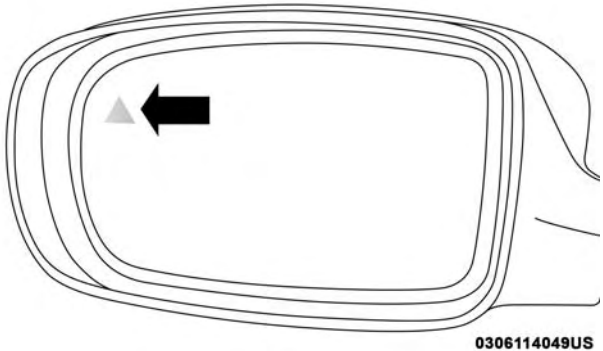

BSM Warning Light

The BSM detection zone covers approximately one lane width on both sides of the vehicle 12 ft (3.8 m). The zone length starts at the outside rear view mirror and extends approximately 10 ft (3 m) beyond the rear bumper of the vehicle. The BSM system monitors the detection zones on both sides of the vehicle when the vehicle speed reaches approximately 6 mph (10 km/h) or higher and will alert the driver of vehicles in these areas.

NOTE:

- The BSM system does NOT alert the driver about rapidly approaching vehicles that are outside the detection zones.
- The BSM system detection zone DOES NOT change if your vehicle is towing a trailer. Therefore, visually verify the adjacent lane is clear for both your vehicle and trailer before making a lane change. If the trailer or other object (i.e., bicycle, sports equipment) extends beyond the side of your vehicle, this may result in the BSM warning light randomly alerting on the trailer or even remaining illuminated the entire time the vehicle is in a forward gear.
- The Blind Spot Monitoring (BSM) system may experience drop outs (blinking on and off) of the side mirror Warning Indicator lamps when a motorcycle or any small object remains at the side of the vehicle for extended periods of time (more than a couple of seconds).

The area on the rear fascia where the radar sensors are located must remain free of snow, ice, and dirt/road contamination so that the BSM system can function properly. Do not block the area of the rear fascia where the radar sensors are located with foreign objects (bumper stickers, bicycle racks, etc.).

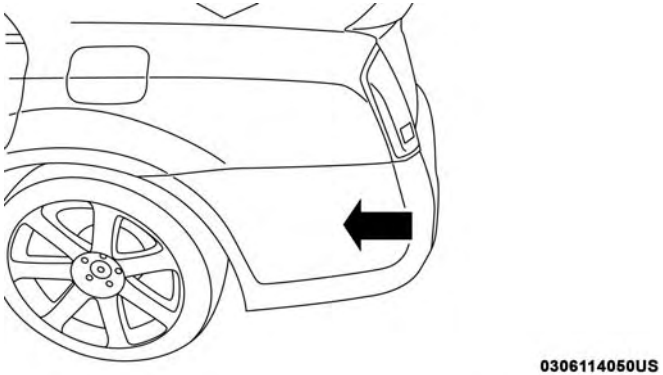

Sensor Location (Driver Side Shown)

The BSM system notifies the driver of objects in the detection zones by illuminating the BSM warning light located in the outside mirrors in addition to sounding an audible (chime) alert and reducing the radio volume if the corresponding turn signal is activated. Refer to “Modes Of Operation” for further information.

The BSM system monitors the detection zone from three different entry points (side, rear, front) while driving to see if an alert is necessary. The BSM system will issue an alert during these types of zone entries.

Entering From The Side

Vehicles that move into your adjacent lanes from either side of the vehicle.

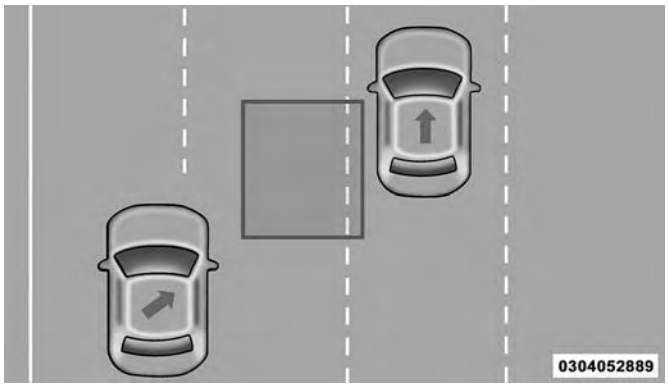

Side Monitoring

Entering From The Rear

Vehicles that come up from behind your vehicle on either side and enter the rear detection zone with a relative speed of less than 31 mph (50 km/h).

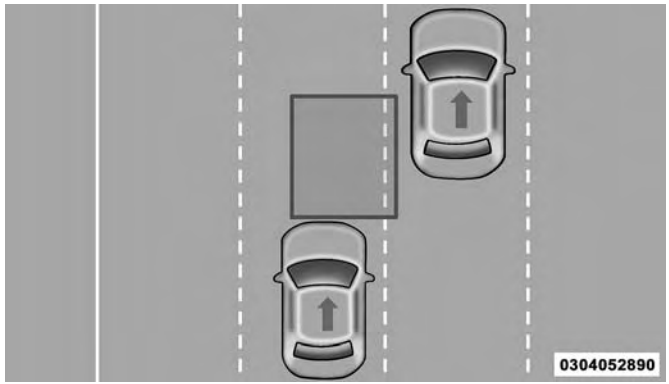

Rear Monitoring

Overtaking Traffic

If you pass another vehicle slowly with a relative speed of less than 15 mph (24 km/h) and the vehicle remains in the blind spot for approximately 1.5 seconds, the warning light will be illuminated. If the difference in speed between the two vehicles is greater than 15 mph (24 km/h), the warning light will not illuminate.

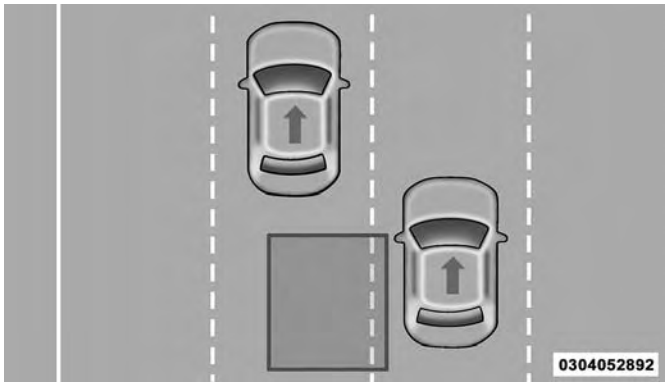

Overtaking/Approaching

The BSM system is designed not to issue an alert on stationary objects such as guardrails, posts, walls, foliage, berms, etc. However, occasionally the system may alert on such objects. This is normal operation and your vehicle does not require service.

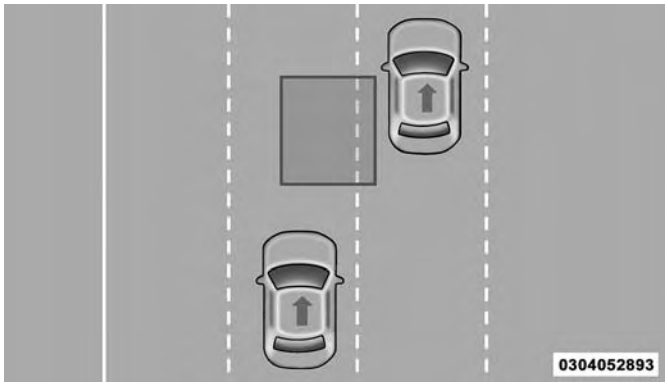

Overtaking/Passing

The BSM system will not alert you of objects that are traveling in the opposite direction of the vehicle in adjacent lanes.

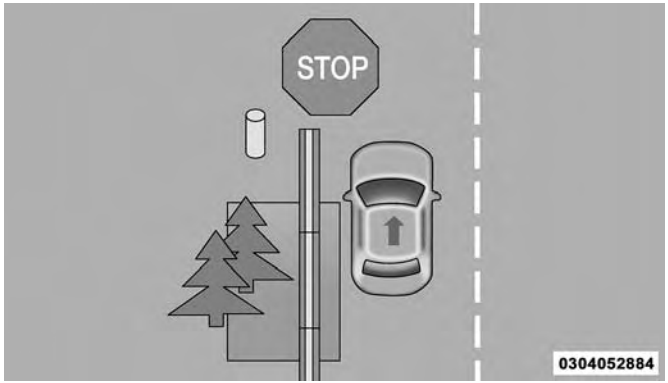

Stationary Objects

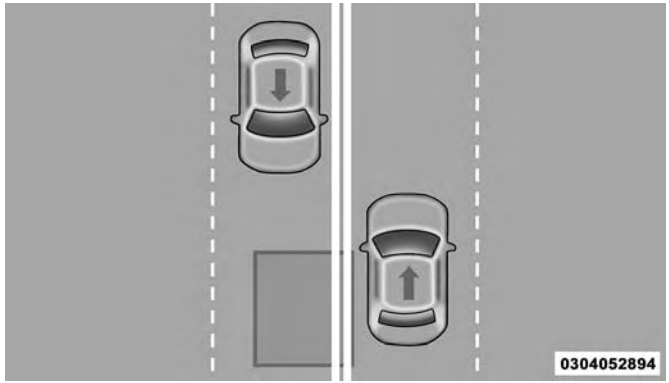

Opposing Traffic

WARNING!

The Blind Spot Monitoring system is only an aid to help detect objects in the blind spot zones. The BSM system is not designed to detect pedestrians, bicyclists, or animals. Even if your vehicle is equipped with the BSM system, always check your vehicle's mirrors, glance over your shoulder, and use your turn signal before changing lanes. Failure to do so can result in serious injury or death.

Rear Cross Path (RCP)

The Rear Cross Path (RCP) feature is intended to aid the driver when backing out of parking spaces where their vision of oncoming vehicles may be blocked. Proceed slowly and cautiously out of the parking space until the rear end of the vehicle is exposed. The RCP system will then have a clear view of the cross traffic and if an oncoming vehicle is detected, alert the driver.

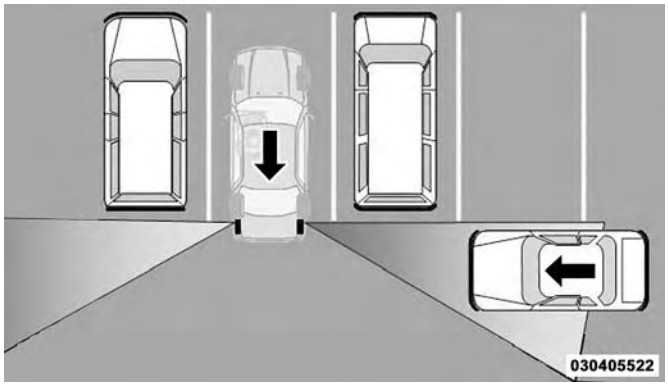

RCP Detection Zones

RCP monitors the rear detection zones on both sides of the vehicle, for objects that are moving toward the side of the vehicle with a minimum speed of approximately 3 mph (5 km/h), to objects moving a maximum of approximately 20 mph (32 km/h), such as in parking lot situations.

NOTE: In a parking lot situation, oncoming vehicles can be obscured by vehicles parked on either side. If the sensors are blocked by other structures or vehicles, the system will not be able to alert the driver.

When RCP is on and the vehicle is in REVERSE, the driver is alerted using both the visual and audible alarms, including reducing the radio volume.

WARNING!

Rear Cross Path Detection (RCP) is not a back up aid system. It is intended to be used to help a driver detect an oncoming vehicle in a parking lot situation. Drivers must be careful when backing up, even when using RCP. Always check carefully behind your vehicle, look behind you, and be sure to check for pedestrians, animals, other vehicles, obstructions, and blind spots before backing up. Failure to do so can result in serious injury or death.

Modes Of Operation

Three selectable modes of operation are available in the Uconnect System. Refer to "Uconnect Settings" in "Multimedia" for further information.

Blind Spot Alert Lights Only

When operating in Blind Spot Alert mode, the BSM system will provide a visual alert in the appropriate side view mirror based on a detected object. However, when the system is operating in Rear Cross Path (RCP) mode, the system will respond with both visual and audible alerts when a detected object is present. Whenever an audible alert is requested, the radio is muted.

Blind Spot Alert Lights/Chime

When operating in Blind Spot Alert Lights/Chime mode, the BSM system will provide a visual alert in the appropriate side view mirror based on a detected object. If the turn signal is then activated, and it corresponds to an alert present on that side of the vehicle, an audible chime will also be sounded. Whenever a turn signal and detected object are present on the same side at the same time, both the visual and audible alerts will be issued. In addition to the audible alert the radio (if on) will also be muted.

NOTE: Whenever an audible alert is requested by the BSM system, the radio is also muted.

When the system is in RCP, the system shall respond with both visual and audible alerts when a detected object is present. Whenever an audible alert is requested, the radio is also muted. Turn/hazard signal status is ignored; the RCP state always requests the chime.

Blind Spot Alert Off

When the BSM system is turned off there will be no visual or audible alerts from either the BSM or RCP systems.

NOTE: The BSM system will store the current operating mode when the vehicle is shut off. Each time the vehicle is started the previously stored mode will be recalled and used.

General Information

The following regulatory statement applies to all Radio Frequency (RF) devices equipped in this vehicle:

This device complies with Part 15 of the FCC Rules and with Industry Canada license-exempt RSS standard(s). Operation is subject to the following two conditions:

1. This device may not cause harmful interference.
2. This device must accept any interference received, including interference that may cause undesired operation.

NOTE: Changes or modifications not expressly approved by the party responsible for compliance could void the user's authority to operate the equipment.

Forward Collision Warning (FCW) With Mitigation Operation

The Forward Collision Warning (FCW) system with mitigation provides the driver with audible warnings, visual warnings (within the instrument cluster display), and may apply a brake jerk to warn the driver when it detects a potential frontal collision. The warnings and limited braking are intended to provide the driver with enough time to react, avoid or mitigate the potential collision.

NOTE: FCW monitors the information from the forward looking sensors, as well as the Electronic Stability Control (ESC) system, to calculate the probability of a forward collision. When the system determines that a forward collision is probable, the driver will be provided with audible and visual warnings and may provide a brake jerk warning. If the driver does not take action based upon these progressive warnings, then the system will provide a limited level of active braking to help slow the vehicle and mitigate the potential forward collision. If the driver reacts to the warnings by braking and the system determines that the driver intends to avoid the collision by braking but has not applied sufficient brake force, the system will compensate and provide additional brake force as required. If a Forward Collision Warning with Mitigation event begins at a speed below 20 mph (32 km/h), the system may provide the maximum or partial braking to mitigate the potential forward collision. If the Forward Collision Warning with Mitigation event stops the vehicle completely, the system will hold the vehicle at standstill for two seconds and then release the brakes.

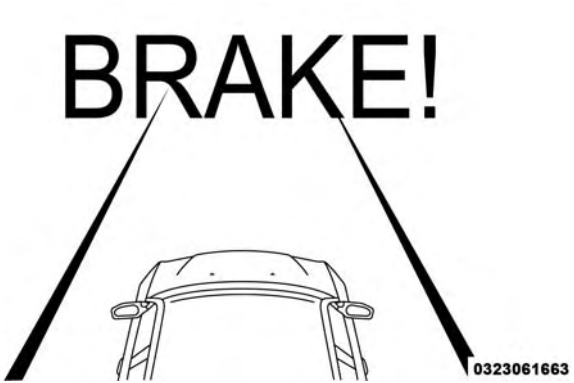

FCW Message

When the system determines a collision with the vehicle in front of you is no longer probable, the warning message will be deactivated.

NOTE:

- The minimum speed for FCW activation is 1 mph (2 km/h).
- The FCW alerts may be triggered on objects other than vehicles such as guard rails or sign posts based on the course prediction. This is expected and is a part of normal FCW activation and functionality.
- It is unsafe to test the FCW system. To prevent such misuse of the system, after four Active Braking events within an ignition cycle, the Active Braking portion of FCW will be deactivated until the next ignition cycle.
- The FCW system is intended for on-road use only. If the vehicle is taken off-road, the FCW system should be deactivated to prevent unnecessary warnings to the surroundings.

WARNING!

Forward Collision Warning (FCW) is not intended to avoid a collision on its own, nor can FCW detect every type of potential collision. The driver has the responsibility to avoid a collision by controlling the vehicle via braking and steering. Failure to follow this warning could lead to serious injury or death.

Turning FCW On Or Off

NOTE: The default status of FCW is on; this allows the system to warn you of a possible collision with the vehicle in front of you.

The Forward Collision activation/deactivation is located in "Uconnect Settings" under "Safety And Driving Assistance". Forward Collision can be checked or unchecked.

When FCW is selected off, there will be an "FCW OFF" icon that appears in the instrument cluster display.

Changing the FCW status to off prevents the system from warning you of a possible collision with the vehicle in front of you.

NOTE: FCW system is temporarily turned off when ESC Full-Off Mode is active.

Changing FCW And Active Braking Status

The FCW Sensitivity and Active Braking settings are programmable through the Uconnect System. Refer to "Uconnect Settings" in "Multimedia" for further information.

The default status of FCW is the "Far" setting and the Active Braking is set to "on"; this allows the system to warn you of a possible collision with the vehicle in front of you when you are farther away and it applies limited braking. This gives you the most reaction time to avoid a possible collision.

Changing the FCW status to the "Near" setting, allows the system to warn you of a possible collision with the vehicle in front of you when you are much closer. This setting provides less reaction time than the "Far" setting, which allows for a more dynamic driving experience.

NOTE:

- The system will retain the last setting selected by the driver after ignition shut down.
- FCW may not react to irrelevant objects such as overhead objects, ground reflections, objects not in the path of the vehicle, stationary objects that are far away, oncoming traffic, or leading vehicles with the same or higher rate of speed.
- FCW will be disabled like ACC, with the unavailable screens.

FCW Limited Warning

If the instrument cluster display reads "ACC/FCW Limited Functionality" or "ACC/FCW Limited Functionality Clean Front Windshield" momentarily, there may be a condition that limits FCW functionality. Although the vehicle is still drivable under normal conditions, the active braking may not be fully available. Once the condition that limited the system performance is no longer present, the system will return to its full performance state. If the problem persists, see your authorized dealer.

Service FCW Warning

If the system turns off, and the instrument cluster display reads:

- ACC/FCW Unavailable Service Required
- Cruise/FCW Unavailable Service Required

This indicates there is an internal system fault. Although the vehicle is still drivable under normal conditions, have the system checked by an authorized dealer.

General Information

The following regulatory statement applies to all Radio Frequency (RF) devices equipped in this vehicle:

This device complies with Part 15 of the FCC Rules and with Industry Canada license-exempt RSS standard(s). Operation is subject to the following two conditions:

1. This device may not cause harmful interference.
2. This device must accept any interference received, including interference that may cause undesired operation.

NOTE: Changes or modifications not expressly approved by the party responsible for compliance could void the user's authority to operate the equipment.

Tire Pressure Monitoring System (TPMS)

The Tire Pressure Monitor System (TPMS) will warn the driver of a low tire pressure based on the vehicle recommended cold placard pressure.

The tire pressure will vary with temperature by about 1 psi (7 kPa) for every 12°F (6.5°C). This means that when the outside temperature decreases, the tire pressure will decrease. Tire pressure should always be set based on cold inflation tire pressure. This is defined as the tire pressure after the vehicle has not been driven for at least three hours, or driven less than 1 mile (1.6 km) after a three hour period. The cold tire inflation pressure must not exceed the maximum inflation pressure molded into the tire sidewall. Refer to "Tires" in "Servicing And Maintenance" for information on how to properly inflate the vehicle's tires. The tire pressure will also increase as the vehicle is driven - this is normal and there should be no adjustment for this increased pressure.

The TPMS will warn the driver of a low tire pressure if the tire pressure falls below the low-pressure warning limit for any reason, including low temperature effects and natural pressure loss through the tire.

The TPMS will continue to warn the driver of low tire pressure as long as the condition exists, and will not turn off until the tire pressure is at or above the recommended cold placard pressure. Once the low tire pressure warning (TPMS Warning Light) illuminates, you must increase the tire pressure to the recommended cold placard pressure in order for the TPMS Warning Light to turn off. The system will automatically update and the TPMS Warning Light will turn off once the system receives the updated tire pressures. The vehicle may need to be driven for up to 20 minutes above 15 mph (24 km/h) in order for the TPMS to receive this information.

NOTE: When filling warm tires, the tire pressure may need to be increased up to an additional 4 psi (28 kPa) above the recommended cold placard pressure in order to turn the TPMS Warning Light off.

For example, your vehicle may have a recommended cold (parked for more than three hours) placard pressure of 30 psi (207 kPa). If the ambient temperature is 68°F (20°C) and the measured tire pressure is 27 psi (186 kPa), a temperature drop to 20°F (-7°C) will decrease the tire pressure to approximately 23 psi (158 kPa). This tire pressure is sufficiently low enough to turn on the TPMS Warning Light. Driving the vehicle may cause the tire pressure to rise to approximately 27 psi (186 kPa), but the TPMS Warning Light will still be on. In this situation, the TPMS Warning Light will turn off only after the tires are inflated to the vehicle's recommended cold placard pressure value.

CAUTION!

- **The TPMS has been optimized for the original equipment tires and wheels. TPMS pressures and warning have been established for the tire size equipped on your vehicle. Undesirable system operation or sensor damage may result when using replacement equipment that is not of the same size, type, and/or style. The TPM sensor is not designed for use on aftermarket wheels and may contribute to a poor overall system performance or sensor damage. Customers are encouraged to use OEM wheels to assure proper TPM feature operation.**
- **Using aftermarket tire sealants may cause the Tire Pressure Monitoring System (TPMS) sensor to become inoperable. After using an aftermarket tire sealant it is recommended that you take your vehicle to your authorized dealer to have your sensor function checked.**

(Continued)

CAUTION! *(Continued)*

- **After inspecting or adjusting the tire pressure always reinstall the valve stem cap. This will prevent moisture and dirt from entering the valve stem, which could damage the TPMS sensor.**

NOTE:

- The TPMS is not intended to replace normal tire care and maintenance or to provide warning of a tire failure or condition.
- The TPMS should not be used as a tire pressure gauge while adjusting your tire pressure.
- Driving on a significantly under-inflated tire causes the tire to overheat and can lead to tire failure. Under-inflation also reduces fuel efficiency and tire tread life, and may affect the vehicle's handling and stopping ability.
- The TPMS is not a substitute for proper tire maintenance, and it is the driver's responsibility to maintain correct tire pressure using an accurate tire pressure gauge, even if under-inflation has not reached the level to trigger illumination of the TPMS Warning Light.
- Seasonal temperature changes will affect tire pressure, and the TPMS will monitor the actual tire pressure in the tire.

Premium System

The Tire Pressure Monitor System (TPMS) uses wireless technology with wheel rim mounted electronic sensors to monitor tire pressure levels. Sensors, mounted to each wheel as part of the valve stem, transmit tire pressure readings to the receiver module.

NOTE: It is particularly important for you to check the tire pressure in all of the tires on your vehicle monthly and to maintain the proper pressure.

The TPMS consists of the following components:

- Receiver module
- Four tire pressure monitoring sensors
- Various tire pressure monitoring system messages, which display in the instrument cluster
- Tire Pressure Monitoring System Warning Light

Tire Pressure Monitoring Low Pressure Warnings

The Tire Pressure Monitoring System (TPMS) Warning Light will illuminate in the instrument cluster and a chime will sound when tire pressure is low in one or more of the four active road tires. In addition, the instrument cluster will display an "Inflate to XX" message and a graphic showing the pressure values of each tire with the low tire pressure values shown in a different color.

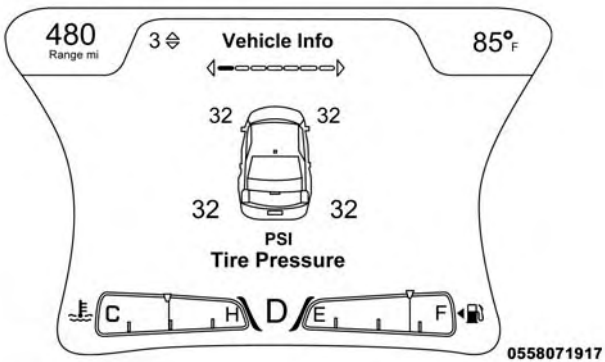

Tire Pressure Monitor Display

Should this occur, you should stop as soon as possible and inflate the tires with a low pressure condition (those shown in a different color in the instrument cluster graphic) to the vehicle's recommended cold placard pressure inflation value as shown in the "Inflate to XX" message. Once the system receives the updated tire pressures, the system will automatically update, the graphic display in the instrument cluster will change color back to the original color, and the TPMS Warning Light will turn off. The vehicle may need to be driven for up to 20 minutes above 15 mph (24 km/h) in order for the TPMS to receive this information.

NOTE: When filling warm tires, the tire pressure may need to be increased up to an additional 4 psi (28 kPa) above the recommended cold placard pressure in order to turn the TPMS Warning Light off.

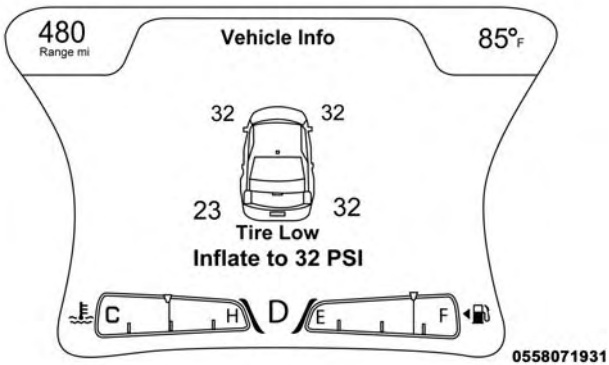

Low Tire Pressure Monitor Display

Service Tire Pressure System Warning

If a system fault is detected, the Tire Pressure Monitoring System (TPMS) Warning Light will flash on and off for 75 seconds and then remain on solid. The system fault will also sound a chime. In addition, the instrument cluster will display a "Service Tire Pressure System" message for a minimum of five seconds and then display dashes (- -) in place of the pressure value to indicate which sensor is not being received.

If the ignition switch is cycled, this sequence will repeat, providing the system fault still exists. If the system fault no longer exists, the TPMS Warning Light will no longer flash, and the "Service Tire Pressure System" message will no longer display, and a pressure value will display in place of the dashes. A system fault can occur due to any of the following:

- Signal interference due to electronic devices or driving next to facilities emitting the same radio frequencies as the TPM sensors.
- Accumulation of snow or ice around the wheels or wheel housings.
- Using tire chains on the vehicle.
- Using wheels/tires not equipped with TPM sensors.

Vehicles With Compact Spare

1. The compact spare tire or non-matching full size does not have a tire pressure monitoring sensor. Therefore, the TPMS will not monitor the pressure in the compact or non-matching full size spare tire.

2. If you install the compact or non-matching full size spare tire in place of a road tire that has a pressure below the low-pressure warning limit, upon the next ignition key cycle, the TPMS Warning Light will remain on and a chime will sound. In addition, the graphic in the instrument cluster will still display a different color pressure value and an "Inflate to XX" message.

3. After driving the vehicle for up to 20 minutes above 15 mph (24 km/h), the TPMS Warning Light will flash on and off for 75 seconds and then remain on solid. In addition, the instrument cluster will display a "Service Tire Pressure System" message for five seconds and then display dashes (- -) in place of the pressure value.

4. For each subsequent ignition key cycle, a chime will sound, the TPMS Warning Light will flash on and off for 75 seconds and then remain on solid, and the instrument cluster will display a "Service Tire Pressure System" message for five seconds and then display dashes (- -) in place of the pressure value.

5. Once you repair or replace the original road tire and reinstall it on the vehicle in place of the compact spare or non-matching full size, the TPMS will update automatically. In addition, the TPMS Warning Light will turn off and the graphic in the instrument cluster will display a new pressure value instead of dashes (- -), as long as no tire pressure is below the low-pressure warning limit in any of the four active road tires. The vehicle may need to be driven for up to 20 minutes above 15 mph (24 km/h) in order for the TPMS to receive this information.

TPMS Deactivation — If Equipped

The Tire Pressure Monitoring System (TPMS) can be deactivated if replacing all four wheel and tire assemblies (road tires) with wheel and tire assemblies that do not have TPMS Sensors, such as when installing winter wheel and tire assemblies on your vehicle.

To deactivate the TPMS, first replace all four wheel and tire assemblies (road tires) with tires not equipped with Tire Pressure Monitoring (TPM) Sensors. Then, drive the vehicle for 20 minutes above 15 mph (24 km/h). The TPMS will chime, the TPMS Warning Light will flash on and off for 75 seconds and then remain on. The instrument cluster will display the "Service Tire Pressure System" message and then display dashes (--) in place of the pressure values.

Beginning with the next ignition cycle, the TPMS will no longer chime or display the "Service Tire Pressure System" message in the instrument cluster but dashes (--) will remain in place of the pressure values.

To reactivate the TPMS, replace all four wheel and tire assemblies (road tires) with tires equipped with TPM sensors. Then, drive the vehicle for up to 20 minutes above 15 mph (24 km/h). The TPMS will chime, the TPMS Warning Light will flash on and off for 75 seconds and then turn off. The instrument cluster will display the "Service Tire Pressure System" message and then display pressure values in place of the dashes. On the next ignition cycle the "Service Tire Pressure System" message will no longer be displayed as long as no system fault exists.

General Information

The following regulatory statement applies to all radio frequency (RF) devices equipped in this vehicle:

This device complies with Part 15 of the FCC Rules and with Industry Canada license-exempt RSS standard(s). Operation is subject to the following two conditions:

(1) This device may not cause harmful interference, and

(2) This device must accept any interference received, including interference that may cause undesired operation.

NOTE: Changes or modifications not expressly approved by the party responsible for compliance could void the user's authority to operate the equipment.

OCCUPANT RESTRAINT SYSTEMS

Some of the most important safety features in your vehicle are the restraint systems:

Occupant Restraint Systems Features

- Seat Belt Systems
- Supplemental Restraint Systems (SRS) Air Bags
- Child Restraints

Some of the safety features described in this section may be standard equipment on some models, or may be optional equipment on others. If you are not sure, ask an authorized dealer.

Important Safety Precautions

Please pay close attention to the information in this section. It tells you how to use your restraint system properly, to keep you and your passengers as safe as possible.

Here are some simple steps you can take to minimize the risk of harm from a deploying air bag:

1. Children 12 years old and under should always ride buckled up in the rear seat of a vehicle with a rear seat.

2. A child who is not big enough to wear the vehicle seat belt properly (Refer to "Child Restraints" in this section for further information) must be secured in the appropriate child restraint or belt-positioning booster seat in a rear seating position.
3. If a child from 2 to 12 years old (not in a rear-facing child restraint) must ride in the front passenger seat, move the seat as far back as possible and use the proper child restraint (Refer to "Child Restraints" in this section for further information).
4. Never allow children to slide the shoulder belt behind them or under their arm.
5. You should read the instructions provided with your child restraint to make sure that you are using it properly.
6. All occupants should always wear their lap and shoulder belts properly.
7. The driver and front passenger seats should be moved back as far as practical to allow the front air bags room to inflate.
8. Do not lean against the door or window. If your vehicle has side air bags, and deployment occurs, the side air bags will inflate forcefully into the space between occupants and the door and occupants could be injured.
9. If the air bag system in this vehicle needs to be modified to accommodate a disabled person, refer to the "Customer Assistance" section for customer service contact information.

WARNING!

- **Never place a rear-facing child restraint in front of an air bag. A deploying passenger front air bag can cause death or serious injury to a child 12 years or younger, including a child in a rear-facing child restraint.**
- **Never install a rear-facing child restraint in the front seat of a vehicle. Only use a rear-facing child restraint in the rear seat. If the vehicle does not have a rear seat, do not transport a rear-facing child restraint in that vehicle.**

Seat Belt Systems

Buckle up even though you are an excellent driver, even on short trips. Someone on the road may be a poor driver and could cause a collision that includes you. This can happen far away from home or on your own street.

Research has shown that seat belts save lives, and they can reduce the seriousness of injuries in a collision. Some of the worst injuries happen when people are thrown from the vehicle. Seat belts reduce the possibility of ejection and the risk of injury caused by striking the inside of the vehicle. Everyone in a motor vehicle should be belted at all times.

Enhanced Seat Belt Use Reminder System (BeltAlert)

Driver and Passenger BeltAlert (if equipped)

BeltAlert is a feature intended to remind the driver and outboard front seat passenger (if equipped with outboard front passenger seat BeltAlert) to buckle their seat belts. The Belt Alert feature is active whenever the ignition switch is in the START or ON/RUN position.

Initial Indication

If the driver is unbuckled when the ignition switch is first in the START or ON/RUN position, a chime will signal for a few seconds. If the driver or outboard front seat passenger (if equipped with outboard front passenger seat BeltAlert) is unbuckled when the ignition switch is first in the START or ON/RUN position the Seat Belt Reminder Light will turn on and remain on until both outboard front seat belts are buckled. The outboard front passenger seat BeltAlert is not active when an outboard front passenger seat is unoccupied.

BeltAlert Warning Sequence

The BeltAlert warning sequence is activated when the vehicle is moving above a specified vehicle speed range and the driver or outboard front seat passenger is unbuckled (if equipped with outboard front passenger seat BeltAlert) (the outboard front passenger seat BeltAlert is not active when the outboard front passenger seat is unoccupied). The BeltAlert warning sequence starts by blinking the Seat Belt Reminder Light and sounding an intermittent chime. Once the BeltAlert warning sequence has completed, the Seat Belt Reminder Light will remain on until the seat belts are buckled. The BeltAlert warning sequence may repeat based on vehicle speed until the driver and occupied outboard front seat passenger seat belts are buckled. The driver should instruct all occupants to buckle their seat belts.

Change of Status

If the driver or outboard front seat passenger (if equipped with outboard front passenger seat BeltAlert) unbuckles their seat belt while the vehicle is traveling, the BeltAlert warning sequence will begin until the seat belts are buckled again.

The outboard front passenger seat BeltAlert is not active when the outboard front passenger seat is unoccupied. BeltAlert may be triggered when an animal or other items are placed on the outboard front passenger seat or when the seat is folded flat (if equipped). It is recommended that pets be restrained in the rear seat (if equipped) in pet harnesses or pet carriers that are secured by seat belts, and cargo is properly stowed.

BeltAlert can be activated or deactivated by an authorized dealer. FCA US LLC does not recommend deactivating BeltAlert.

NOTE: If BeltAlert has been deactivated and the driver or outboard front seat passenger (if equipped with outboard front passenger seat BeltAlert) is unbuckled the Seat Belt Reminder Light will turn on and remain on until the driver and outboard front seat passenger seat belts are buckled.

Lap/Shoulder Belts

All seating positions in your vehicle are equipped with lap/shoulder belts.

The seat belt webbing retractor will lock only during very sudden stops or collisions. This feature allows the shoulder part of the seat belt to move freely with you under normal conditions. However, in a collision the seat belt will lock and reduce your risk of striking the inside of the vehicle or being thrown out of the vehicle.

WARNING!

- **Relying on the air bags alone could lead to more severe injuries in a collision. The air bags work with your seat belt to restrain you properly. In some collisions, the air bags won't deploy at all. Always wear your seat belt even though you have air bags.**
- **In a collision, you and your passengers can suffer much greater injuries if you are not properly buckled up. You can strike the interior of your vehicle or other passengers, or you can be thrown out of the vehicle. Always be sure you and others in your vehicle are buckled up properly.**

(Continued)

WARNING! *(Continued)*

- It is dangerous to ride in a cargo area, inside or outside of a vehicle. In a collision, people riding in these areas are more likely to be seriously injured or killed.
- Do not allow people to ride in any area of your vehicle that is not equipped with seats and seat belts.
- Be sure everyone in your vehicle is in a seat and using a seat belt properly. Occupants, including the driver, should always wear their seat belts whether or not an air bag is also provided at their seating position to minimize the risk of severe injury or death in the event of a crash.
- Wearing your seat belt incorrectly could make your injuries in a collision much worse. You might suffer internal injuries, or you could even slide out of the seat belt. Follow these instructions to wear your seat belt safely and to keep your passengers safe, too.
- Two people should never be belted into a single seat belt. People belted together can crash into one another in a collision, hurting one another badly. Never use a lap/shoulder belt or a lap belt for more than one person, no matter what their size.

WARNING!

- A lap belt worn too high can increase the risk of injury in a collision. The seat belt forces won't be at the strong hip and pelvic bones, but across your abdomen. Always wear the lap part of your seat belt as low as possible and keep it snug.
- A twisted seat belt may not protect you properly. In a collision, it could even cut into you. Be sure the seat belt is flat against your body, without twists. If you can't straighten a seat belt in your vehicle, take it to an authorized dealer immediately and have it fixed.
- A seat belt that is buckled into the wrong buckle will not protect you properly. The lap portion could ride too high on your body, possibly causing internal injuries. Always buckle your seat belt into the buckle nearest you.
- A seat belt that is too loose will not protect you properly. In a sudden stop, you could move too far forward, increasing the possibility of injury. Wear your seat belt snugly.

(Continued)

WARNING! ***(Continued)***

- **A seat belt that is worn under your arm is dangerous. Your body could strike the inside surfaces of the vehicle in a collision, increasing head and neck injury. A seat belt worn under the arm can cause internal injuries. Ribs aren't as strong as shoulder bones. Wear the seat belt over your shoulder so that your strongest bones will take the force in a collision.**
- **A shoulder belt placed behind you will not protect you from injury during a collision. You are more likely to hit your head in a collision if you do not wear your shoulder belt. The lap and shoulder belt are meant to be used together.**
- **A frayed or torn seat belt could rip apart in a collision and leave you with no protection. Inspect the seat belt system periodically, checking for cuts, frays, or loose parts. Damaged parts must be replaced immediately. Do not disassemble or modify the seat belt system. Seat belt assemblies must be replaced after a collision.**

Lap/Shoulder Belt Operating Instructions

1. Enter the vehicle and close the door. Sit back and adjust the seat.
2. The seat belt latch plate is above the back of the front seat, and next to your arm in the rear seat (for vehicles equipped with a rear seat). Grasp the latch plate and pull out the seat belt. Slide the latch plate up the webbing as far as necessary to allow the seat belt to go around your lap.

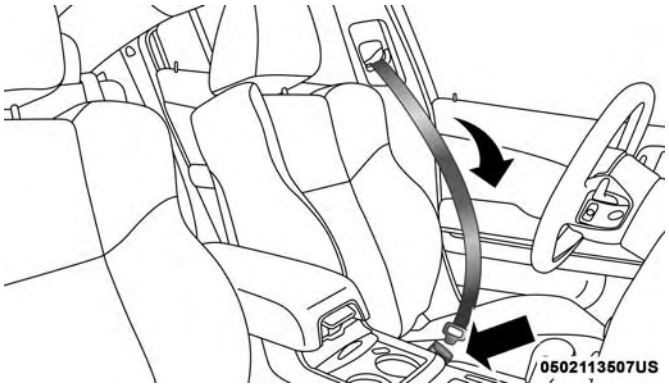

Pulling Out The Latch Plate

3. When the seat belt is long enough to fit, insert the latch plate into the buckle until you hear a "click."

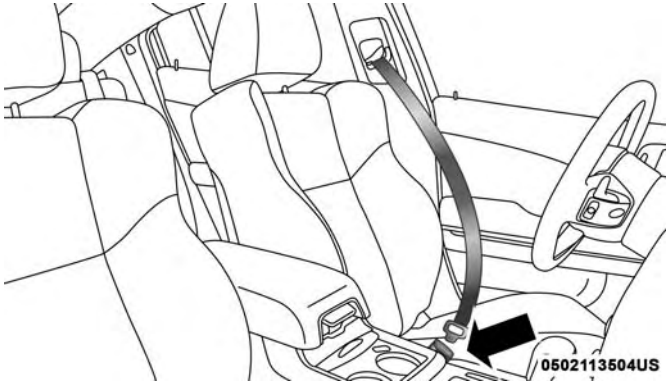

Inserting Latch Plate Into Buckle

4. Position the lap belt so that it is snug and lies low across your hips, below your abdomen. To remove slack in the lap belt portion, pull up on the shoulder belt. To loosen the lap belt if it is too tight, tilt the latch plate and pull on the lap belt. A snug seat belt reduces the risk of sliding under the seat belt in a collision.

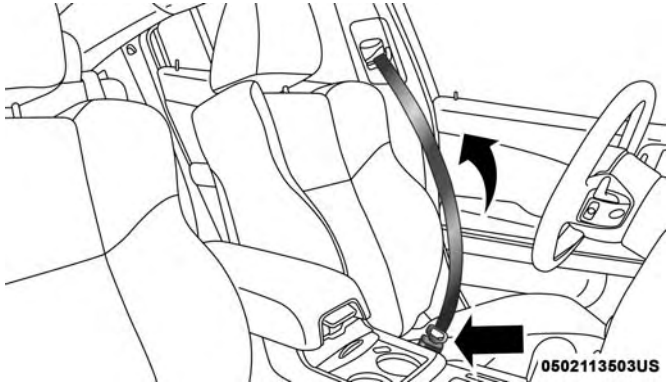

Positioning The Lap Belt

5. Position the shoulder belt across the shoulder and chest with minimal, if any slack so that it is comfortable and not resting on your neck. The retractor will withdraw any slack in the shoulder belt.

6. To release the seat belt, push the red button on the buckle. The seat belt will automatically retract to its stowed position. If necessary, slide the latch plate down the webbing to allow the seat belt to retract fully.

Lap/Shoulder Belt Untwisting Procedure

Use the following procedure to untwist a twisted lap/shoulder belt.

1. Position the latch plate as close as possible to the anchor point.
2. At about 6 to 12 inches (15 to 30 cm) above the latch plate, grasp and twist the seat belt webbing 180 degrees to create a fold that begins immediately above the latch plate.
3. Slide the latch plate upward over the folded webbing. The folded webbing must enter the slot at the top of the latch plate.
4. Continue to slide the latch plate up until it clears the folded webbing and the seat belt is no longer twisted.

Adjustable Upper Shoulder Belt Anchorage

In the driver and outboard front passenger seats, the top of the shoulder belt can be adjusted upward or downward to position the seat belt away from your neck. Push or squeeze the anchorage button to release the anchorage, and move it up or down to the position that serves you best.

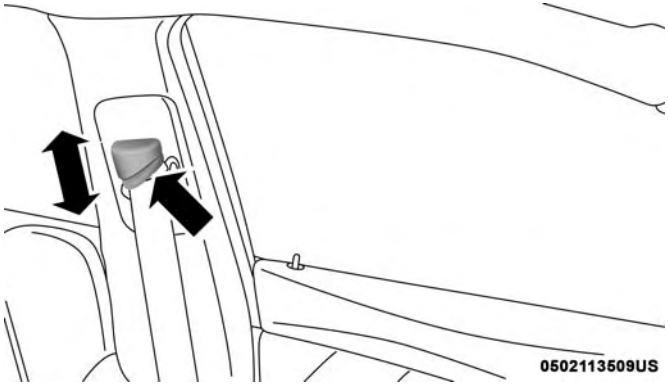

Adjustable Anchorage

As a guide, if you are shorter than average, you will prefer the shoulder belt anchorage in a lower position, and if you are taller than average, you will prefer the shoulder belt anchorage in a higher position. After you release the anchorage button, try to move it up or down to make sure that it is locked in position.

NOTE: The adjustable upper shoulder belt anchorage is equipped with an Easy Up feature. This feature allows the shoulder belt anchorage to be adjusted in the upward position without pushing or squeezing the release button. To verify the shoulder belt anchorage is latched, pull downward on the shoulder belt anchorage until it is locked into position.

WARNING!

- **Wearing your seat belt incorrectly could make your injuries in a collision much worse. You might suffer internal injuries, or you could even slide out of the seat belt. Follow these instructions to wear your seat belt safely and to keep your passengers safe, too.**
- **Position the shoulder belt across the shoulder and chest with minimal, if any slack so that it is comfortable and not resting on your neck. The retractor will withdraw any slack in the shoulder belt.**
- **Misadjustment of the seat belt could reduce the effectiveness of the safety belt in a crash.**
- **Always make all seat belt height adjustments when the vehicle is stationary.**

Seat Belt Extender

If a seat belt is not long enough to fit properly, even when the webbing is fully extended and the adjustable upper shoulder belt anchorage (if equipped) is in its lowest position, an authorized dealer can provide you with a Seat Belt Extender. The Seat Belt Extender should be used only if the existing seat belt is not long enough. When the Seat Belt Extender is not required for a different occupant, it must be removed.

WARNING!

- **ONLY use a Seat Belt Extender if it is physically required in order to properly fit the original seat belt system. DO NOT USE the Seat Belt Extender if, when worn, the distance between the front edge of the Seat Belt Extender buckle and the center of the occupant's body is LESS than 6 inches.**
- **Using a Seat Belt Extender when not needed can increase the risk of serious injury or death in a collision. Only use the Seat Belt Extender when the lap belt is not long enough and only use in the recommended seating positions. Remove and store the Seat Belt Extender when not needed.**

Seat Belts And Pregnant Women

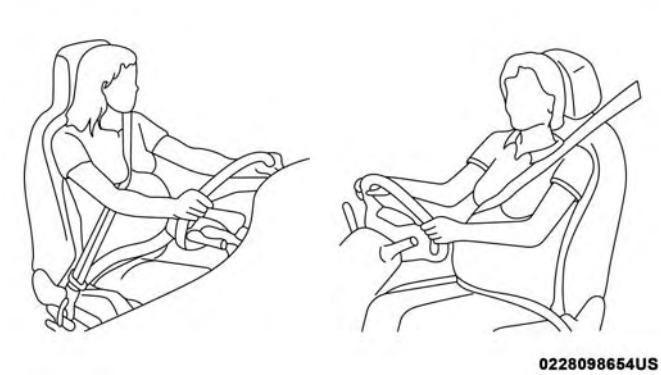

Pregnant Women And Seat Belts

Seat belts must be worn by all occupants including pregnant women: the risk of injury in the event of an accident is reduced for the mother and the unborn child if they are wearing a seat belt.

Position the lap belt snug and low below the abdomen and across the strong bones of the hips. Place the shoulder belt across the chest and away from the neck. Never place the shoulder belt behind the back or under the arm.

Seat Belt Pretensioner

The front outboard seat belt system is equipped with pretensioning devices that are designed to remove slack from the seat belt in the event of a collision. These devices may improve the performance of the seat belt by removing slack from the seat belt early in a collision. Pretensioners work for all size occupants, including those in child restraints.

NOTE: These devices are not a substitute for proper seat belt placement by the occupant. The seat belt still must be worn snugly and positioned properly.

The pretensioners are triggered by the Occupant Restraint Controller (ORC). Like the air bags, the pretensioners are single use items. A deployed pretensioner or a deployed air bag must be replaced immediately.

Energy Management Feature

The front outboard seat belt system is equipped with an Energy Management feature that may help further reduce the risk of injury in the event of a collision. The seat belt system has a retractor assembly that is designed to release webbing in a controlled manner.

Switchable Automatic Locking Retractors (ALR)

The seat belts in the passenger seating positions are equipped with a Switchable Automatic Locking Retractor (ALR) which is used to secure a child restraint system. For additional information, refer to “Installing Child Restraints Using The Vehicle Seat Belt” under the “Child Restraints” section of this manual. The figure below illustrates the locking feature for each seating position.

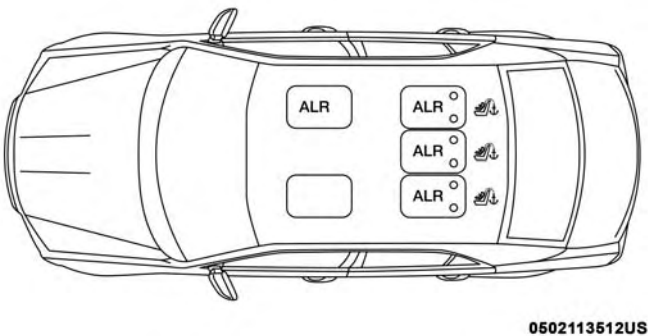

ALR — Switchable Automatic Locking Retractor

If the passenger seating position is equipped with an ALR and is being used for normal usage, only pull the seat belt webbing out far enough to comfortably wrap around the occupant’s mid-section so as to not activate the ALR. If the ALR is activated, you will hear a clicking sound as the seat belt retracts. Allow the webbing to retract completely in this case and then carefully pull out only the amount of webbing necessary to comfortably wrap around the occupant’s mid-section. Slide the latch plate into the buckle until you hear a ″click.″

In Automatic Locking Mode, the shoulder belt is automatically pre-locked. The seat belt will still retract to remove any slack in the shoulder belt. Use the Automatic Locking Mode anytime a child restraint is installed in a seating position that has a seat belt with this feature. Children 12 years old and under should always be properly restrained in the rear seat of a vehicle with a rear seat.

WARNING!

- **Never place a rear-facing child restraint in front of an air bag. A deploying passenger front air bag can cause death or serious injury to a child 12 years or younger, including a child in a rear-facing child restraint.**
- **Never install a rear-facing child restraint in the front seat of a vehicle. Only use a rear-facing child restraint in the rear seat. If the vehicle does not have a rear seat, do not transport a rear-facing child restraint in that vehicle.**

How To Engage The Automatic Locking Mode

1. Buckle the combination lap and shoulder belt.
2. Grasp the shoulder portion and pull downward until the entire seat belt is extracted.
3. Allow the seat belt to retract. As the seat belt retracts, you will hear a clicking sound. This indicates the seat belt is now in the Automatic Locking Mode.

How To Disengage The Automatic Locking Mode

Unbuckle the combination lap/shoulder belt and allow it to retract completely to disengage the Automatic Locking Mode and activate the vehicle sensitive (emergency) locking mode.

WARNING!

- **The seat belt assembly must be replaced if the switchable Automatic Locking Retractor (ALR) feature or any other seat belt function is not working properly when checked according to the procedures in the Service Manual.**
- **Failure to replace the seat belt assembly could increase the risk of injury in collisions.**
- **Do not use the Automatic Locking Mode to restrain occupants who are wearing the seat belt or children who are using booster seats. The locked mode is only used to install rear-facing or forward-facing child restraints that have a harness for restraining the child.**

Supplemental Restraint Systems (SRS)

Some of the safety features described in this section may be standard equipment on some models, or may be optional equipment on others. If you are not sure, ask an authorized dealer.

The air bag system must be ready to protect you in a collision. The Occupant Restraint Controller (ORC) monitors the internal circuits and interconnecting wiring associated with the electrical Air Bag System Components. Your vehicle may be equipped with the following Air Bag System Components:

Air Bag System Components

- Occupant Restraint Controller (ORC)
- Air Bag Warning Light
- Steering Wheel and Column
- Instrument Panel
- Knee Impact Bolsters
- Driver and Front Passenger Air Bags
- Seat Belt Buckle Switch
- Supplemental Side Air Bags
- Supplemental Knee Air Bags
- Front and Side Impact Sensors
- Seat Belt Pretensioners
- Seat Track Position Sensors

Air Bag Warning Light

The ORC monitors the readiness of the electronic parts of the air bag system whenever the ignition switch is in the START or ON/RUN position. If the ignition switch is in the OFF position or in the ACC position, the air bag system is not on and the air bags will not inflate.

The ORC contains a backup power supply system that may deploy the air bag system even if the battery loses power or it becomes disconnected prior to deployment.

The ORC turns on the Air Bag Warning Light in the instrument panel for approximately four to eight seconds for a self-check when the ignition switch is first in the ON/RUN position. After the self-check, the Air Bag Warning Light will turn off. If the ORC detects a malfunction in any part of the system, it turns on the Air Bag Warning Light, either momentarily or continuously. A single chime will sound to alert you if the light comes on again after initial startup.

The ORC also includes diagnostics that will illuminate the instrument panel Air Bag Warning Light if a malfunction is detected that could affect the air bag system. The diagnostics also record the nature of the malfunction. While the air bag system is designed to be maintenance free, if any of the following occurs, have an authorized dealer service the air bag system immediately.

- The Air Bag Warning Light does not come on during the four to eight seconds when the ignition switch is first in the ON/RUN position.
- The Air Bag Warning Light remains on after the four to eight-second interval.
- The Air Bag Warning Light comes on intermittently or remains on while driving.

NOTE: If the speedometer, tachometer, or any engine related gauges are not working, the Occupant Restraint Controller (ORC) may also be disabled. In this condition the air bags may not be ready to inflate for your protection. Have an authorized dealer service the air bag system immediately.

WARNING!

Ignoring the Air Bag Warning Light in your instrument panel could mean you won't have the air bag system to protect you in a collision. If the light does not come on as a bulb check when the ignition is first turned on, stays on after you start the vehicle, or if it comes on as you drive, have an authorized dealer service the air bag system immediately.

Redundant Air Bag Warning Light

If a fault with the Air Bag Warning Light is detected, which could affect the Supplemental Restraint System (SRS), the Redundant Air Bag Warning Light will illuminate on the instrument panel. The Redundant Air Bag Warning Light will stay on until the fault is cleared. In addition, a single chime will sound to alert you that the Redundant Air Bag Warning Light has come on and a fault has been detected. If the Redundant Air Bag Warning Light comes on intermittently or remains on while driving have an authorized dealer service the vehicle immediately.

For additional information regarding the Redundant Air Bag Warning Light refer to "Getting To Know Your Instrument Panel" section of this manual.

Front Air Bags

This vehicle has front air bags and lap/shoulder belts for both the driver and front passenger. The front air bags are a supplement to the seat belt restraint systems. The driver front air bag is mounted in the center of the steering wheel. The passenger front air bag is mounted in the instrument panel, above the glove compartment. The words "SRS AIRBAG" or "AIRBAG" are embossed on the air bag covers.

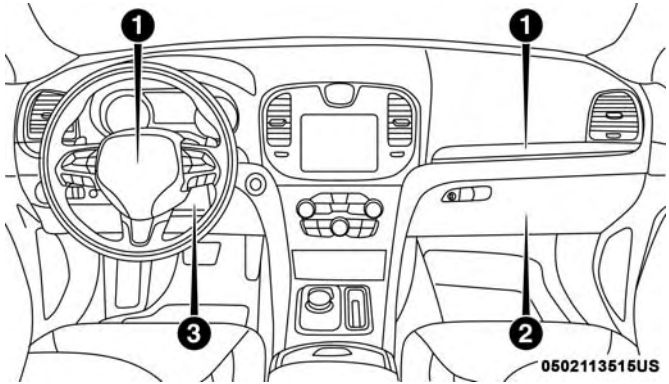

Front Air Bag/Knee Bolster Locations

1 — Driver And Passenger Front Air Bags
2 — Passenger Knee Impact Bolster
3 — Driver Knee Impact Bolster/Supplemental Driver Knee Air Bag

WARNING!

- **Being too close to the steering wheel or instrument panel during front air bag deployment could cause serious injury, including death. Air bags need room to inflate. Sit back, comfortably extending your arms to reach the steering wheel or instrument panel.**

(Continued)

WARNING! ***(Continued)***

- **Never place a rear-facing child restraint in front of an air bag. A deploying passenger front air bag can cause death or serious injury to a child 12 years or younger, including a child in a rear-facing child restraint.**
- **Never install a rear-facing child restraint in the front seat of a vehicle. Only use a rear-facing child restraint in the rear seat. If the vehicle does not have a rear seat, do not transport a rear-facing child restraint in that vehicle.**

Driver And Passenger Front Air Bag Features

The Advanced Front Air Bag system has multistage driver and front passenger air bags. This system provides output appropriate to the severity and type of collision as determined by the Occupant Restraint Controller (ORC), which may receive information from the front impact sensors (if equipped) or other system components.

The first stage inflator is triggered immediately during an impact that requires air bag deployment. A low energy output is used in less severe collisions. A higher energy output is used for more severe collisions.

This vehicle may be equipped with a driver and/or front passenger seat belt buckle switch that detects whether the driver or front passenger seat belt is buckled. The seat belt buckle switch may adjust the inflation rate of the Advanced Front Air Bags.

This vehicle may be equipped with driver and/or front passenger seat track position sensors that may adjust the inflation rate of the Advanced Front Air Bags based upon seat position.

WARNING!

- **No objects should be placed over or near the air bag on the instrument panel or steering wheel because any such objects could cause harm if the vehicle is in a collision severe enough to cause the air bag to inflate.**
- **Do not put anything on or around the air bag covers or attempt to open them manually. You may damage the air bags and you could be injured because the air bags may no longer be functional. The protective covers for the air bag cushions are designed to open only when the air bags are inflating.**

(Continued)

WARNING! *(Continued)*

- **Relying on the air bags alone could lead to more severe injuries in a collision. The air bags work with your seat belt to restrain you properly. In some collisions, air bags won't deploy at all. Always wear your seat belts even though you have air bags.**

Front Air Bag Operation

Front Air Bags are designed to provide additional protection by supplementing the seat belts. Front air bags are not expected to reduce the risk of injury in rear, side, or rollover collisions. The front air bags will not deploy in all frontal collisions, including some that may produce substantial vehicle damage — for example, some pole collisions, truck underrides, and angle offset collisions.

On the other hand, depending on the type and location of impact, front air bags may deploy in crashes with little vehicle front-end damage but that produce a severe initial deceleration.

Because air bag sensors measure vehicle deceleration over time, vehicle speed and damage by themselves are not good indicators of whether or not an air bag should have deployed.

Seat belts are necessary for your protection in all collisions, and also are needed to help keep you in position, away from an inflating air bag.

When the ORC detects a collision requiring the front air bags, it signals the inflator units. A large quantity of non-toxic gas is generated to inflate the front air bags.

The steering wheel hub trim cover and the upper passenger side of the instrument panel separate and fold out of the way as the air bags inflate to their full size. The front air bags fully inflate in less time than it takes to blink your eyes. The front air bags then quickly deflate while helping to restrain the driver and front passenger.

Knee Impact Bolsters

The Knee Impact Bolsters help protect the knees of the driver and front passenger, and position the front occupants for improved interaction with the front air bags.

WARNING!

- **Do not drill, cut, or tamper with the knee impact bolsters in any way.**
- **Do not mount any accessories to the knee impact bolsters such as alarm lights, stereos, citizen band radios, etc.**

Supplemental Driver Knee Air Bag

This vehicle is equipped with a Supplemental Driver Knee Air Bag mounted in the instrument panel below the steering column. The Supplemental Driver Knee Air Bag provides enhanced protection during a frontal impact by working together with the seat belts, pretensioners, and front air bags.

Supplemental Side Air Bags

Supplemental Seat-Mounted Side Air Bags (SABs)

This vehicle is equipped with Supplemental Seat-Mounted Side Air Bags (SABs).

Supplemental Seat-Mounted Side Air Bags (SABs) are located in the outboard side of the front seats. The SABs are marked with "SRS AIRBAG" or "AIRBAG" on a label or on the seat trim on the outboard side of the seats.

The SABs may help to reduce the risk of occupant injury during certain side impacts, in addition to the injury reduction potential provided by the seat belts and body structure.

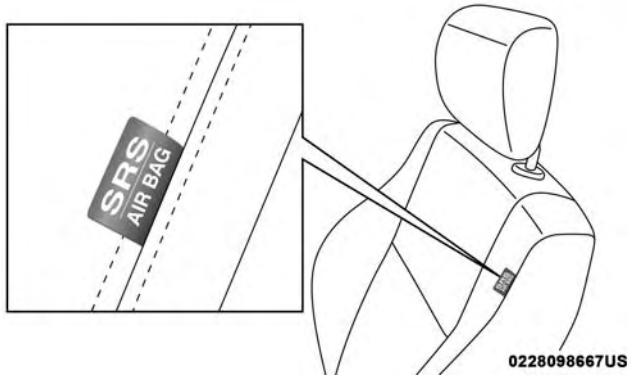

Front Supplemental Seat-Mounted Side Air Bag Label

When the SAB deploys, it opens the seam on the outboard side of the seatback's trim cover. The inflating SAB deploys through the seat seam into the space between the occupant and the door. The SAB moves at a very high speed and with such a high force that it could injure occupants if they are not seated properly, or if items are positioned in the area where the SAB inflates. Children are at an even greater risk of injury from a deploying air bag.

WARNING!

Do not use accessory seat covers or place objects between you and the Side Air Bags; the performance could be adversely affected and/or objects could be pushed into you, causing serious injury.

Supplemental Side Air Bag Inflatable Curtains (SABICs)

This vehicle is equipped with Supplemental Side Air Bag Inflatable Curtains (SABICs).

Supplemental Side Air Bag Inflatable Curtains (SABICs) are located above the side windows. The trim covering the SABICs is labeled “SRS AIRBAG” or “AIRBAG.”

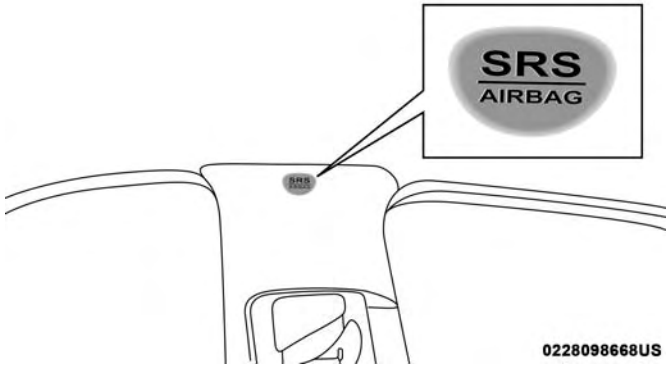

Supplemental Side Air Bag Inflatable Curtain (SABIC) Label Location

SABICs may help reduce the risk of head and other injuries to front and rear seat outboard occupants in certain side impacts, in addition to the injury reduction potential provided by the seat belts and body structure.

The SABIC deploys downward, covering the side windows. An inflating SABIC pushes the outside edge of the headliner out of the way and covers the window. The SABICs inflate with enough force to injure occupants if they are not belted and seated properly, or if items are positioned in the area where the SABICs inflate. Children are at an even greater risk of injury from a deploying air bag.

The SABICs may help reduce the risk of partial or complete ejection of vehicle occupants through side windows in certain side impact events.

WARNING!

- **Do not mount equipment, or stack luggage or other cargo up high enough to block the deployment of the SABICs. The trim covering above the side windows where the SABIC and its deployment path are located should remain free from any obstructions.**
- **In order for the SABICs to work as intended, do not install any accessory items in your vehicle which could alter the roof. Do not add an aftermarket sunroof to your vehicle. Do not add roof racks that require permanent attachments (bolts or screws) for installation on the vehicle roof. Do not drill into the roof of the vehicle for any reason.**

Side Impacts

The Side Air Bags are designed to activate in certain side impacts. The Occupant Restraint Controller (ORC) determines whether the deployment of the Side Air Bags in a particular impact event is appropriate, based on the severity and type of collision. The side impact sensors aid the ORC in determining the appropriate response to impact events. The system is calibrated to deploy the Side Air Bags on the impact side of the vehicle during impacts that require Side Air Bag occupant protection. In side impacts, the Side Air Bags deploy independently; a left side impact deploys the left Side Air Bags only and a right-side impact deploys the right Side Air Bags only. Vehicle damage by itself is not a good indicator of whether or not Side Air Bags should have deployed.

The Side Air Bags will not deploy in all side collisions, including some collisions at certain angles, or some side collisions that do not impact the area of the passenger compartment. The Side Air Bags may deploy during angled or offset frontal collisions where the front air bags deploy.

Side Air Bags are a supplement to the seat belt restraint system. Side Air Bags deploy in less time than it takes to blink your eyes.

WARNING!

- **Occupants, including children, who are up against or very close to Side Air Bags can be seriously injured or killed. Occupants, including children, should never lean on or sleep against the door, side windows, or area where the side air bags inflate, even if they are in an infant or child restraint.**
- **Seat belts (and child restraints where appropriate) are necessary for your protection in all collisions. They also help keep you in position, away from an inflating Side Air Bag. To get the best protection from the Side Air Bags, occupants must wear their seat belts properly and sit upright with their backs against the seats. Children must be properly restrained in a child restraint or booster seat that is appropriate for the size of the child.**

WARNING!

- **Side Air Bags need room to inflate. Do not lean against the door or window. Sit upright in the center of the seat.**

(Continued)

WARNING! ***(Continued)***

- **Being too close to the Side Air Bags during deployment could cause you to be severely injured or killed.**
- **Relying on the Side Air Bags alone could lead to more severe injuries in a collision. The Side Air Bags work with your seat belt to restrain you properly. In some collisions, Side Air Bags won't deploy at all. Always wear your seat belt even though you have Side Air Bags.**

NOTE: Air bag covers may not be obvious in the interior trim, but they will open during air bag deployment.

Rollover Events

Side Air Bags are designed to activate in certain rollover events. The ORC determines whether the deployment of the Side Air Bags in a particular rollover event is appropriate, based on the severity and type of collision. Vehicle damage by itself is not a good indicator of whether or not Side Air Bags should have deployed.

The Side Air Bags will not deploy in all rollover events. The rollover sensing system determines if a rollover event may be in progress and whether deployment is appropriate. In the event the vehicle experiences a rollover or near rollover event, and deployment of the Side Air Bags is appropriate, the rollover sensing system will also deploy the seat belt pretensioners on both sides of the vehicle.

The SABICs may help reduce the risk of partial or complete ejection of vehicle occupants through side windows in certain rollover or side impact events.

Air Bag System Components

NOTE: The Occupant Restraint Controller (ORC) monitors the internal circuits and interconnecting wiring associated with electrical Air Bag System Components listed below:

- Occupant Restraint Controller (ORC)
- Air Bag Warning Light
- Steering Wheel and Column
- Instrument Panel
- Knee Impact Bolsters
- Driver and Front Passenger Air Bags
- Seat Belt Buckle Switch
- Supplemental Side Air Bags
- Supplemental Knee Air Bags
- Front and Side Impact Sensors
- Seat Belt Pretensioners
- Seat Track Position Sensors

If A Deployment Occurs

The front air bags are designed to deflate immediately after deployment.

NOTE: Front and/or side air bags will not deploy in all collisions. This does not mean something is wrong with the air bag system.

If you do have a collision which deploys the air bags, any or all of the following may occur:

- The air bag material may sometimes cause abrasions and/or skin reddening to the occupants as the air bags deploy and unfold. The abrasions are similar to friction rope burns or those you might get sliding along a carpet or gymnasium floor. They are not caused by contact with chemicals. They are not permanent and normally heal quickly. However, if you haven't healed significantly within a few days, or if you have any blistering, see your doctor immediately.

- As the air bags deflate, you may see some smoke-like particles. The particles are a normal by-product of the process that generates the non-toxic gas used for air bag inflation. These airborne particles may irritate the skin, eyes, nose, or throat. If you have skin or eye irritation, rinse the area with cool water. For nose or throat irritation, move to fresh air. If the irritation continues, see your doctor. If these particles settle on your clothing, follow the garment manufacturer's instructions for cleaning.

Do not drive your vehicle after the air bags have deployed. If you are involved in another collision, the air bags will not be in place to protect you.

WARNING!

Deployed air bags and seat belt pretensioners cannot protect you in another collision. Have the air bags, seat belt pretensioners, and the seat belt retractor assemblies replaced by an authorized dealer immediately. Also, have the Occupant Restraint Controller System serviced as well.

NOTE:

- Air bag covers may not be obvious in the interior trim, but they will open during air bag deployment.
- After any collision, the vehicle should be taken to an authorized dealer immediately.

Enhanced Accident Response System

In the event of an impact, if the communication network remains intact, and the power remains intact, depending on the nature of the event, the ORC will determine whether to have the Enhanced Accident Response System perform the following functions:

- Cut off fuel to the engine (If Equipped)
- Cut off battery power to the electric motor (If Equipped)
- Flash hazard lights as long as the battery has power
- Turn on the interior lights, which remain on as long as the battery has power or for 15 minutes from the intervention of the Enhanced Accident Response System.
- Unlock the power door locks.

Your vehicle may also be designed to perform any of these other functions in response to the Enhanced Accident Response System:

- Turn off the Fuel Filter Heater, Turn off the HVAC Blower Motor, Close the HVAC Circulation Door
- Cut off battery power to the:
  - Engine
  - Electric Motor (if equipped)
  - Electric power steering
  - Brake booster
  - Electric park brake
  - Automatic transmission gear selector
  - Horn
  - Front wiper
  - Headlamp washer pump

NOTE: After an accident, remember to cycle the ignition to the STOP (OFF/LOCK) position and remove the key from the ignition switch to avoid draining the battery. Carefully check the vehicle for fuel leaks in the engine compartment and on the ground near the engine compartment and fuel tank before resetting the system and starting the engine. If there are no fuel leaks or damage to the vehicle electrical devices (e.g. headlights) after an accident, reset the system by following the procedure described below. If you have any doubt, contact an authorized dealer.

Enhanced Accident Response System Reset Procedure

In order to reset the Enhanced Accident Response System functions after an event, the ignition switch must be changed from ignition START or ON/RUN to ignition OFF. Carefully check the vehicle for fuel leaks in the engine compartment and on the ground near the engine compartment and fuel tank before resetting the system and starting the engine.

Maintaining Your Air Bag System

WARNING!

- **Modifications to any part of the air bag system could cause it to fail when you need it. You could be injured if the air bag system is not there to protect you. Do not modify the components or wiring, including adding any kind of badges or stickers to the steering wheel hub trim cover or the upper passenger side of the instrument panel. Do not modify the front bumper, vehicle body structure, or add aftermarket side steps or running boards.**
- **It is dangerous to try to repair any part of the air bag system yourself. Be sure to tell anyone who works on your vehicle that it has an air bag system.**
- **Do not attempt to modify any part of your air bag system. The air bag may inflate accidentally or may not function properly if modifications are made. Take your vehicle to an authorized dealer for any air bag system service. If your seat, including your trim cover and cushion, needs to be serviced in any way (including removal or loosening/tightening of seat attachment bolts), take the vehicle to an authorized**

(Continued)

WARNING! *(Continued)*

dealer. Only manufacturer approved seat accessories may be used. If it is necessary to modify the air bag system for persons with disabilities, contact an authorized dealer.

Event Data Recorder (EDR)

This vehicle is equipped with an event data recorder (EDR). The main purpose of an EDR is to record, in certain crash or near crash-like situations, such as an air bag deployment or hitting a road obstacle, data that will assist in understanding how a vehicle's systems performed. The EDR is designed to record data related to vehicle dynamics and safety systems for a short period of time, typically 30 seconds or less. The EDR in this vehicle is designed to record such data as:

- How various systems in your vehicle were operating;
- Whether or not the driver and passenger safety belts were buckled/fastened;
- How far (if at all) the driver was depressing the accelerator and/or brake pedal; and,
- How fast the vehicle was traveling.

These data can help provide a better understanding of the circumstances in which crashes and injuries occur.

NOTE: EDR data are recorded by your vehicle only if a non-trivial crash situation occurs; no data are recorded by the EDR under normal driving conditions and no personal data (e.g., name, gender, age, and crash location) are recorded. However, other parties, such as law enforcement, could combine the EDR data with the type of personally identifying data routinely acquired during a crash investigation.

To read data recorded by an EDR, special equipment is required, and access to the vehicle or the EDR is needed. In addition to the vehicle manufacturer, other parties, such as law enforcement, that have the special equipment, can read the information if they have access to the vehicle or the EDR.

Child Restraints

Everyone in your vehicle needs to be buckled up at all times, including babies and children. Every state in the United States, and every Canadian province, requires that small children ride in proper restraint systems. This is the law, and you can be prosecuted for ignoring it.

Children 12 years or younger should ride properly buckled up in a rear seat, if available. According to crash statistics, children are safer when properly restrained in the rear seats rather than in the front.

WARNING!

In a collision, an unrestrained child can become a projectile inside the vehicle. The force required to hold even an infant on your lap could become so great that you could not hold the child, no matter how strong you are. The child and others could be badly injured or killed. Any child riding in your vehicle should be in a proper restraint for the child's size.

There are different sizes and types of restraints for children from newborn size to the child almost large enough for an adult safety belt. Always check the child seat Owner's Manual to make sure you have the correct seat for your child. Carefully read and follow all the instructions and warnings in the child restraint Owner's Manual and on all the labels attached to the child restraint.

Before buying any restraint system, make sure that it has a label certifying that it meets all applicable Safety Standards. You should also make sure that you can install it in the vehicle where you will use it.

NOTE:

- For additional information, refer to http://www.nhtsa.gov/parents-and-caregivers or call: 1–888–327–4236
- Canadian residents should refer to Transport Canada's website for additional information: http://www.tc.gc.ca/eng/motorvehiclesafety/safedrivers-childsafety-index-53.htm

Summary Of Recommendations For Restraining Children In Vehicles

	Child Size, Height, Weight Or Age	Recommended Type Of Child Restraint
Infants and Toddlers	Children who are two years old or younger and who have not reached the height or weight limits of their child restraint	Either an Infant Carrier or a Convertible Child Restraint, facing rearward in a rear seat of the vehicle
Small Children	Children who are at least two years old or who have outgrown the height or weight limit of their rear-facing child restraint	Forward-Facing Child Restraint with a five-point Harness, facing forward in a rear seat of the vehicle
Larger Children	Children who have outgrown their forward-facing child restraint, but are too small to properly fit the vehicle's seat belt	Belt Positioning Booster Seat and the vehicle seat belt, seated in a rear seat of the vehicle
Children Too Large for Child Restraints	Children 12 years old or younger, who have outgrown the height or weight limit of their booster seat	Vehicle Seat Belt, seated in a rear seat of the vehicle

Infant And Child Restraints

Safety experts recommend that children ride rear-facing in the vehicle until they are two years old or until they reach either the height or weight limit of their rear-facing child restraint. Two types of child restraints can be used rear-facing: infant carriers and convertible child seats.

The infant carrier is only used rear-facing in the vehicle. It is recommended for children from birth until they reach the weight or height limit of the infant carrier. Convertible child seats can be used either rear-facing or forward-facing in the vehicle. Convertible child seats often have a higher weight limit in the rear-facing direction than infant carriers do, so they can be used rear-facing by children who have outgrown their infant carrier but are still less than at least two years old. Children should remain rear-facing until they reach the highest weight or height allowed by their convertible child seat.

WARNING!

- **Never place a rear-facing child restraint in front of an air bag. A deploying passenger front air bag can cause death or serious injury to a child 12 years or younger, including a child in a rear-facing child restraint.**

(Continued)

WARNING! *(Continued)*

- **Never install a rear-facing child restraint in the front seat of a vehicle. Only use a rear-facing child restraint in the rear seat. If the vehicle does not have a rear seat, do not transport a rear-facing child restraint in that vehicle.**

Older Children And Child Restraints

Children who are two years old or who have outgrown their rear-facing convertible child seat can ride forward-facing in the vehicle. Forward-facing child seats and convertible child seats used in the forward-facing direction are for children who are over two years old or who have outgrown the rear-facing weight or height limit of their rear-facing convertible child seat. Children should remain in a forward-facing child seat with a harness for as long as possible, up to the highest weight or height allowed by the child seat.

All children whose weight or height is above the forward-facing limit for the child seat should use a belt-positioning booster seat until the vehicle's seat belts fit properly. If the child cannot sit with knees bent over the vehicle's seat

cushion while the child's back is against the seatback, they should use a belt-positioning booster seat. The child and belt-positioning booster seat are held in the vehicle by the seat belt.

WARNING!

- **Improper installation can lead to failure of an infant or child restraint. It could come loose in a collision. The child could be badly injured or killed. Follow the child restraint manufacturer's directions exactly when installing an infant or child restraint.**
- **After a child restraint is installed in the vehicle, do not move the vehicle seat forward or rearward because it can loosen the child restraint attachments. Remove the child restraint before adjusting the vehicle seat position. When the vehicle seat has been adjusted, reinstall the child restraint.**
- **When your child restraint is not in use, secure it in the vehicle with the seat belt or LATCH anchorages, or remove it from the vehicle. Do not leave it loose in the vehicle. In a sudden stop or accident, it could strike the occupants or seatbacks and cause serious personal injury.**

Children Too Large For Booster Seats

Children who are large enough to wear the shoulder belt comfortably, and whose legs are long enough to bend over the front of the seat when their back is against the seatback, should use the seat belt in a rear seat. Use this simple 5-step test to decide whether the child can use the vehicle's seat belt alone:

1. Can the child sit all the way back against the back of the vehicle seat?
2. Do the child's knees bend comfortably over the front of the vehicle seat – while the child is still sitting all the way back?
3. Does the shoulder belt cross the child's shoulder between the neck and arm?
4. Is the lap part of the belt as low as possible, touching the child's thighs and not the stomach?
5. Can the child stay seated like this for the whole trip?

If the answer to any of these questions was “no,” then the child still needs to use a booster seat in this vehicle. If the child is using the lap/shoulder belt, check seat belt fit periodically and make sure the seat belt buckle is latched. A child’s squirming or slouching can move the belt out of position. If the shoulder belt contacts the face or neck, move the child closer to the center of the vehicle, or use a booster seat to position the seat belt on the child correctly.

WARNING!

Never allow a child to put the shoulder belt under an arm or behind their back. In a crash, the shoulder belt will not protect a child properly, which may result in serious injury or death. A child must always wear both the lap and shoulder portions of the seat belt correctly.

Recommendations For Attaching Child Restraints

Restraint Type	Combined Weight of the Child + Child Restraint	Use Any Attachment Method Shown With An “X” Below			
		LATCH – Lower Anchors Only	Seat Belt Only	LATCH – Lower Anchors + Top Tether Anchor	Seat Belt + Top Tether Anchor
Rear-Facing Child Restraint	Up to 65 lbs (29.5 kg)	X	X		
Rear-Facing Child Restraint	More than 65 lbs (29.5 kg)		X		
Forward-Facing Child Restraint	Up to 65 lbs (29.5 kg)			X	X
Forward-Facing Child Restraint	More than 65 lbs (29.5 kg)				X

Lower Anchors And Tethers For CHildren (LATCH) Restraint System

LATCH Label

Your vehicle is equipped with the child restraint anchorage system called LATCH, which stands for Lower Anchors and Tethers for CHildren. The LATCH system has three vehicle anchor points for installing LATCH-equipped child seats. There are two lower anchorages located at the back of the seat cushion where it meets the seatback and one top tether anchorage located behind the seating position. These anchorages are used to install LATCH-equipped child seats without using the vehicle's seat belts. Some seating positions may have a top tether anchorage but no lower anchorages. In these seating positions, the seat belt must be used with the top tether anchorage to install the child restraint. Please see the following table for more information.

LATCH Positions For Installing Child Restraints In This Vehicle

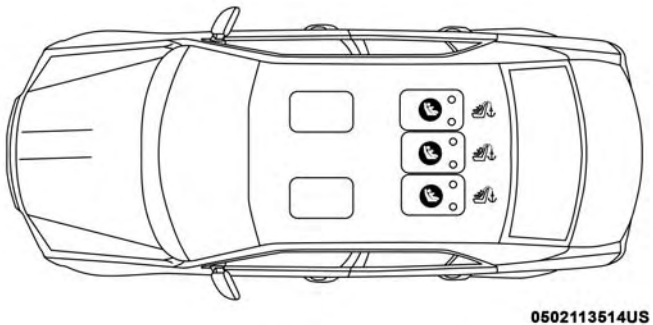

LATCH Positions For Installing Child Restraints In This Vehicle

Lower Anchorage Symbol (2 Anchorages Per Seating Position)
Top Tether Anchorage Symbol

Frequently Asked Questions About Installing Child Restraints With LATCH		
What is the weight limit (child's weight + weight of the child restraint) for using the LATCH anchorage system to attach the child restraint?	65 lbs (29.5 kg)	Use the LATCH anchorage system until the combined weight of the child and the child restraint is 65 lbs (29.5 kg). Use the seat belt and tether anchor instead of the LATCH system once the combined weight is more than 65 lbs (29.5 kg).
Can the LATCH anchorages and the seat belt be used together to attach a rear-facing or forward-facing child restraint?	No	Do not use the seat belt when you use the LATCH anchorage system to attach a rear-facing or forward-facing child restraint. Booster seats may be attached to the LATCH anchorages if allowed by the booster seat manufacturer. See your booster seat owner's manual for more information.
Can two child restraints be attached using a common lower LATCH anchorage?	No	Never "share" a LATCH anchorage with two or more child restraints. If the center position does not have dedicated LATCH lower anchorages, use the seat belt to install a child seat in the center position next to a child seat using the LATCH anchorages in an outboard position.
Can the rear-facing child restraint touch the back of the front passenger seat?	Yes	The child seat may touch the back of the front passenger seat if the child restraint manufacturer also allows contact. See your child restraint owner's manual for more information.
Can the rear head restraints be removed?	No	

Locating The LATCH Anchorages

The lower anchorages are round bars that are found at the rear of the seat cushion where it meets the seatback, below the anchorage symbols on the seatback. They are just visible when you lean into the rear seat to install the child restraint. You will easily feel them if you run your finger along the gap between the seatback and seat cushion.

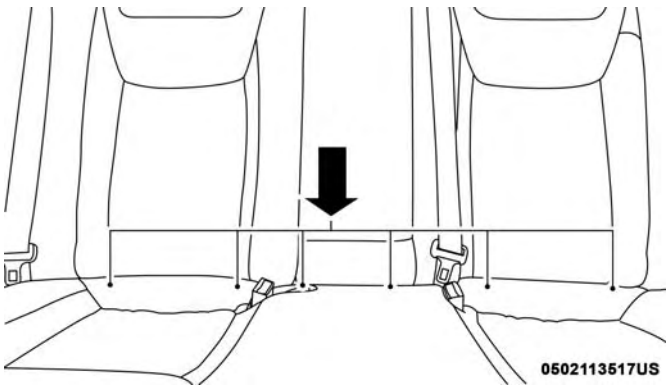

LATCH Anchorages

Locating The Upper Tether Anchorages

There are tether strap anchorages behind each rear seating position located in the panel between the rear seatback and the rear window. They are found under a plastic cover with the tether anchorage symbol on it.

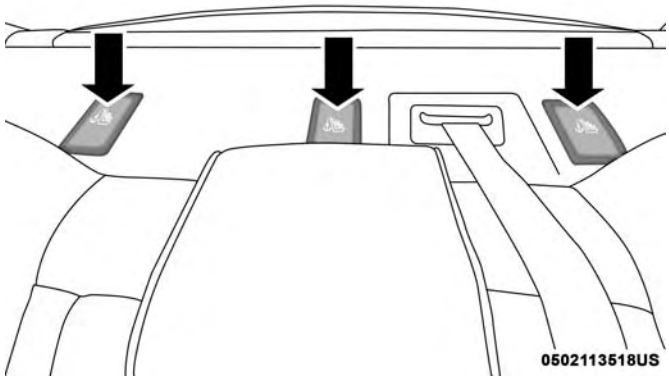

Tether Strap Anchorages

LATCH-compatible child restraint systems will be equipped with a rigid bar or a flexible strap on each side. Each will have a hook or connector to attach to the lower anchorage and a way to tighten the connection to the anchorage. Forward-facing child restraints and some rear-facing child restraints will also be equipped with a tether

strap. The tether strap will have a hook at the end to attach to the top tether anchorage and a way to tighten the strap after it is attached to the anchorage.

Center Seat LATCH

If a child restraint installed in the center position blocks the seat belt webbing or buckle for the outboard position, do not use that outboard position. If a child seat in the center position blocks the outboard LATCH anchors or seat belt, do not install a child seat in that outboard position.

WARNING!

Never use the same lower anchorage to attach more than one child restraint. Please refer to "To Install A LATCH-Compatible Child Restraint" for typical installation instructions.

Always follow the directions of the child restraint manufacturer when installing your child restraint. Not all child restraint systems will be installed as described here.

To Install A LATCH-Compatible Child Restraint

If the selected seating position has a Switchable Automatic Locking Retractor (ALR) seat belt, stow the seat belt, following the instructions below. See the section "Installing Child Restraints Using the Vehicle Seat Belt" to check what type of seat belt each seating position has.

1. Loosen the adjusters on the lower straps and on the tether strap of the child seat so that you can more easily attach the hooks or connectors to the vehicle anchorages.
2. Place the child seat between the lower anchorages for that seating position. For some second row seats, you may need to recline the seat and / or raise the head restraint (if adjustable) to get a better fit. If the rear seat can be moved forward and rearward in the vehicle, you may wish to move it to its rear-most position to make room for the child seat. You may also move the front seat forward to allow more room for the child seat.
3. Attach the lower hooks or connectors of the child restraint to the lower anchorages in the selected seating position.
4. If the child restraint has a tether strap, connect it to the top tether anchorage. See the section "Installing Child Restraints Using the Top Tether Anchorage" for directions to attach a tether anchor.

5. Tighten all of the straps as you push the child restraint rearward and downward into the seat. Remove slack in the straps according to the child restraint manufacturer's instructions.

6. Test that the child restraint is installed tightly by pulling back and forth on the child seat at the belt path. It should not move more than 1 inch (25.4 mm) in any direction.

How To Stow An Unused Switchable-ALR (ALR) Seat Belt:

When using the LATCH attaching system to install a child restraint, stow all ALR seat belts that are not being used by other occupants or being used to secure child restraints. An unused belt could injure a child if they play with it and accidentally lock the seat belt retractor. Before installing a child restraint using the LATCH system, buckle the seat belt behind the child restraint and out of the child's reach. If the buckled seat belt interferes with the child restraint installation, instead of buckling it behind the child restraint, route the seat belt through the child restraint belt path and then buckle it. Do not lock the seat belt. Remind all children in the vehicle that the seat belts are not toys and that they should not play with them.

WARNING!

- **Improper installation of a child restraint to the LATCH anchorages can lead to failure of the restraint. The child could be badly injured or killed. Follow the child restraint manufacturer's directions exactly when installing an infant or child restraint.**
- **Child restraint anchorages are designed to withstand only those loads imposed by correctly-fitted child restraints. Under no circumstances are they to be used for adult seat belts, harnesses, or for attaching other items or equipment to the vehicle.**

Installing Child Restraints Using The Vehicle Seat Belt

Child restraint systems are designed to be secured in vehicle seats by lap belts or the lap belt portion of a lap/shoulder belt.

WARNING!

- **Improper installation or failure to properly secure a child restraint can lead to failure of the restraint. The child could be badly injured or killed.**

(Continued)

WARNING! *(Continued)*

- **Follow the child restraint manufacturer's directions exactly when installing an infant or child restraint.**

The seat belts in the passenger seating positions are equipped with a Switchable Automatic Locking Retractor (ALR) that is designed to keep the lap portion of the seat belt tight around the child restraint so that it is not necessary to use a locking clip. The ALR retractor can be "switched" into a locked mode by pulling all of the webbing out of the retractor and then letting the webbing retract back into the retractor. If it is locked, the ALR will make a clicking noise while the webbing is pulled back into the retractor.

Refer to the "Automatic Locking Mode" description in "Switchable Automatic Locking Retractors (ALR)" under "Occupant Restraint Systems" for additional information on ALR.

Please see the table below and the following sections for more information.

Lap/Shoulder Belt Systems For Installing Child Restraints In This Vehicle

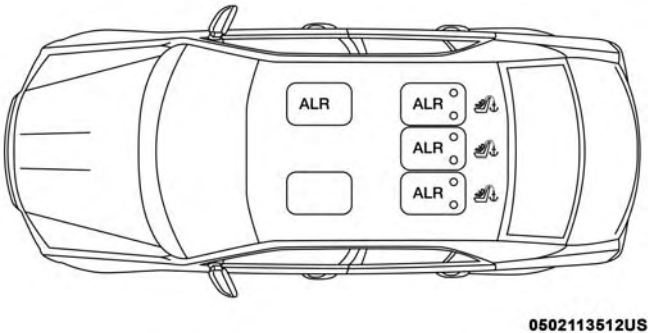

Automatic Locking Retractor (ALR) Locations

ALR = Switchable Automatic Locking Retractor
Top Tether Anchorage Symbol

Frequently Asked Questions About Installing Child Restraints With Seat Belts		
What is the weight limit (child's weight + weight of the child restraint) for using the Tether Anchor with the seat belt to attach a forward facing child restraint?	Weight limit of the Child Restraint	Always use the tether anchor when using the seat belt to install a forward facing child restraint, up to the recommended weight limit of the child restraint.
Can the rear-facing child restraint touch the back of the front passenger seat?	Yes	Contact between the front passenger seat and the child restraint is allowed, if the child restraint manufacturer also allows contact.
Can the rear head restraints be removed?	No	
Can the buckle stalk be twisted to tighten the seat belt against the belt path of the child restraint?	No	Do not twist the buckle stalk in a seating position with an ALR retractor.

Installing A Child Restraint With A Switchable Automatic Locking Retractor (ALR):

Child restraint systems are designed to be secured in vehicle seats by lap belts or the lap belt portion of a lap/shoulder belt.

WARNING!

- **Improper installation or failure to properly secure a child restraint can lead to failure of the restraint. The child could be badly injured or killed.**
- **Follow the child restraint manufacturer's directions exactly when installing an infant or child restraint.**

1. Place the child seat in the center of the seating position. For some second row seats, you may need to recline the seat and/or raise the head restraint (if adjustable) to get a better fit. If the rear seat can be moved forward and rearward in the vehicle, you may wish to move it to its rear-most position to make room for the child seat. You may also move the front seat forward to allow more room for the child seat.
2. Pull enough of the seat belt webbing from the retractor to pass it through the belt path of the child restraint. Do not twist the belt webbing in the belt path.
3. Slide the latch plate into the buckle until you hear a "click."
4. Pull on the webbing to make the lap portion tight against the child seat.
5. To lock the seat belt, pull down on the shoulder part of the belt until you have pulled all the seat belt webbing out of the retractor. Then, allow the webbing to retract back into the retractor. As the webbing retracts, you will hear a clicking sound. This means the seat belt is now in the Automatic Locking mode.
6. Try to pull the webbing out of the retractor. If it is locked, you should not be able to pull out any webbing. If the retractor is not locked, repeat step 5.
7. Finally, pull up on any excess webbing to tighten the lap portion around the child restraint while you push the child restraint rearward and downward into the vehicle seat.
8. If the child restraint has a top tether strap and the seating position has a top tether anchorage, connect the tether strap to the anchorage and tighten the tether strap. See the section "Installing Child Restraints Using the Top Tether Anchorage" for directions to attach a tether anchor.
9. Test that the child restraint is installed tightly by pulling back and forth on the child seat at the belt path. It should not move more than 1 inch (25.4 mm) in any direction.

Any seat belt system will loosen with time, so check the belt occasionally, and pull it tight if necessary.

Installing Child Restraints Using The Top Tether Anchorage:

WARNING!

Do not attach a tether strap for a rear-facing car seat to any location in front of the car seat, including the seat frame or a tether anchorage. Only attach the tether strap of a rear-facing car seat to the tether anchorage that is approved for that seating position, located behind the top of the vehicle seat. See the section "Lower Anchors and Tethers for CHildren (LATCH) Restraint System" for the location of approved tether anchorages in your vehicle.

1. Look behind the seating position where you plan to install the child restraint to find the tether anchorage. You may need to move the seat forward to provide better access to the tether anchorage. If there is no top tether anchorage for that seating position, move the child restraint to another position in the vehicle if one is available.
2. Rotate or lift the cover to access the anchor directly behind the seat where you are placing the child restraint.
3. Route the tether strap to provide the most direct path for the strap between the anchor and the child seat. If your vehicle is equipped with adjustable rear head restraints, raise the head restraint, and where possible, route the tether strap under the head restraint and between the two posts. If not possible, lower the head restraint and pass the tether strap around the outboard side of the head restraint.

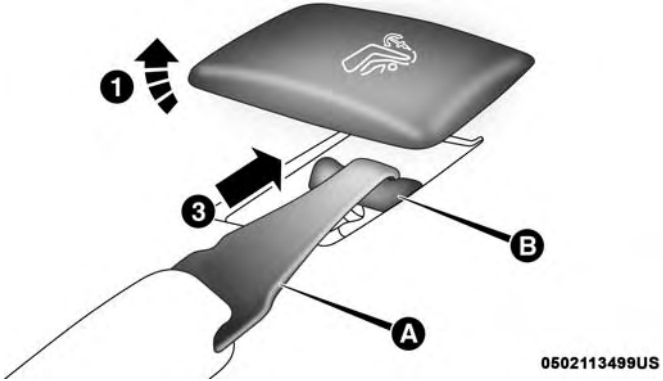

Tether Strap Mounting

1 — Cover	A — Tether Strap Hook
3 — Attaching Strap	B — Tether Anchor

4. Attach the tether strap hook of the child restraint to the top tether anchorage as shown in the diagram.
5. Remove slack in the tether strap according to the child restraint manufacturer's instructions.

WARNING!

- **An incorrectly anchored tether strap could lead to increased head motion and possible injury to the child. Use only the anchorage position directly behind the child seat to secure a child restraint top tether strap.**
- **If your vehicle is equipped with a split rear seat, make sure the tether strap does not slip into the opening between the seatbacks as you remove slack in the strap.**

Center Tether Attachment

1. If adjustable, lower the adjustable center head restraint to the full down position.
2. Route the tether strap over the seatback and head restraint.
3. Attach the tether strap hook of the child restraint to the center tether anchorage located in the panel between the rear seatback and the rear window.
4. Remove slack in the tether strap according to the child restraint manufacturer's instructions.

Transporting Pets

Air Bags deploying in the front seat could harm your pet. An unrestrained pet will be thrown about and possibly injured, or injure a passenger during panic braking or in a collision.

Pets should be restrained in the rear seat (if equipped) in pet harnesses or pet carriers that are secured by seat belts.

SAFETY TIPS

Transporting Passengers

lp;2qNEVER TRANSPORT PASSENGERS IN THE CARGO AREA.

WARNING!

- **Do not leave children or animals inside parked vehicles in hot weather. Interior heat build-up may cause serious injury or death.**
- **It is extremely dangerous to ride in a cargo area, inside or outside of a vehicle. In a collision, people riding in these areas are more likely to be seriously injured or killed.**
- **Do not allow people to ride in any area of your vehicle that is not equipped with seats and seat belts.**

(Continued)

WARNING! *(Continued)*

- **Be sure everyone in your vehicle is in a seat and using a seat belt properly.**

Exhaust Gas

WARNING!

Exhaust gases can injure or kill. They contain carbon monoxide (CO), which is colorless and odorless. Breathing it can make you unconscious and can eventually poison you. To avoid breathing (CO), follow these safety tips:

- **Do not run the engine in a closed garage or in confined areas any longer than needed to move your vehicle in or out of the area.**
- **If you are required to drive with the trunk/liftgate/rear doors open, make sure that all windows are closed and the climate control BLOWER switch is set at high speed. DO NOT use the recirculation mode.**
- **If it is necessary to sit in a parked vehicle with the engine running, adjust your heating or cooling controls to force outside air into the vehicle. Set the blower at high speed.**

The best protection against carbon monoxide entry into the vehicle body is a properly maintained engine exhaust system.

Whenever a change is noticed in the sound of the exhaust system, when exhaust fumes can be detected inside the vehicle, or when the underside or rear of the vehicle is damaged, have a competent mechanic inspect the complete exhaust system and adjacent body areas for broken, damaged, deteriorated, or mispositioned parts. Open seams or loose connections could permit exhaust fumes to seep into the passenger compartment. In addition, inspect the exhaust system each time the vehicle is raised for lubrication or oil change. Replace as required.

Safety Checks You Should Make Inside The Vehicle

Seat Belts

Inspect the seat belt system periodically, checking for cuts, frays, and loose parts. Damaged parts must be replaced immediately. Do not disassemble or modify the system.

Front seat belt assemblies must be replaced after a collision. Rear seat belt assemblies must be replaced after a collision if they have been damaged (i.e., bent retractor, torn webbing, etc.). If there is any question regarding seat belt or retractor condition, replace the seat belt.

Air Bag Warning Light

The Air Bag warning light will turn on for four to eight seconds as a bulb check when the ignition switch is first turned to ON/RUN. If the light is either not on during starting, stays on, or turns on while driving, have the system inspected at an authorized dealer as soon as possible. After the bulb check, this light will illuminate with a single chime when a fault with the Air Bag System has been detected. It will stay on until the fault is removed. If the light comes on intermittently or remains on while driving, have an authorized dealer service the vehicle immediately.

Refer to “Occupant Restraint Systems” in “Safety” for further information.

Defroster

Check operation by selecting the defrost mode and place the blower control on high speed. You should be able to feel the air directed against the windshield. See an authorized dealer for service if your defroster is inoperable.

Floor Mat Safety Information

Always use floor mats designed to fit your vehicle. Only use a floor mat that does not interfere with the operation of the accelerator, brake or clutch pedals. Only use a floor mat that is securely attached using the floor mat fasteners so it cannot slip out of position and interfere with the accelerator, brake or clutch pedals or impair safe operation of your vehicle in other ways.

WARNING!

An improperly attached, damaged, folded, or stacked floor mat, or damaged floor mat fasteners may cause your floor mat to interfere with the accelerator, brake, or clutch pedals and cause a loss of vehicle control. To prevent SERIOUS INJURY or DEATH:

- **ALWAYS securely attach your floor mat using the floor mat fasteners. DO NOT install your floor mat upside down or turn your floor mat over. Lightly pull to confirm mat is secured using the floor mat fasteners on a regular basis.**

(Continued)

WARNING! *(Continued)*

- **ALWAYS REMOVE THE EXISTING FLOOR MAT FROM THE VEHICLE before installing any other floor mat. NEVER install or stack an additional floor mat on top of an existing floor mat.**
- **ONLY install floor mats designed to fit your vehicle. NEVER install a floor mat that cannot be properly attached and secured to your vehicle. If a floor mat needs to be replaced, only use a FCA approved floor mat for the specific make, model, and year of your vehicle.**
- **ONLY use the driver's side floor mat on the driver's side floor area. To check for interference, with the vehicle properly parked with the engine off, fully depress the accelerator, the brake, and the clutch pedal (if present) to check for interference. If your floor mat interferes with the operation of any pedal, or is not secure to the floor, remove the floor mat from the vehicle and place the floor mat in your trunk.**
- **ONLY use the passenger's side floor mat on the passenger's side floor area.**

(Continued)

WARNING! *(Continued)*

- **ALWAYS make sure objects cannot fall or slide into the driver's side floor area when the vehicle is moving. Objects can become trapped under accelerator, brake, or clutch pedals and could cause a loss of vehicle control.**
- **NEVER place any objects under the floor mat (e.g., towels, keys, etc.). These objects could change the position of the floor mat and may cause interference with the accelerator, brake, or clutch pedals.**
- **If the vehicle carpet has been removed and re-installed, always properly attach carpet to the floor and check the floor mat fasteners are secure to the vehicle carpet. Fully depress each pedal to check for interference with the accelerator, brake, or clutch pedals then re-install the floor mats.**
- **It is recommended to only use mild soap and water to clean your floor mats. After cleaning, always check your floor mat has been properly installed and is secured to your vehicle using the floor mat fasteners by lightly pulling mat.**

Periodic Safety Checks You Should Make Outside The Vehicle

Tires

Examine tires for excessive tread wear and uneven wear patterns. Check for stones, nails, glass, or other objects lodged in the tread or sidewall. Inspect the tread for cuts and cracks. Inspect sidewalls for cuts, cracks, and bulges. Check the wheel nuts for tightness. Check the tires (including spare) for proper cold inflation pressure.

Lights

Have someone observe the operation of brake lights and exterior lights while you work the controls. Check turn signal and high beam indicator lights on the instrument panel.

Door Latches

Check for proper closing, latching, and locking.

Fluid Leaks

Check area under the vehicle after overnight parking for fuel, coolant, oil, or other fluid leaks. Also, if gasoline fumes are detected or if fuel, or brake fluid leaks are suspected. The cause should be located and corrected immediately.

STARTING AND OPERATING

CONTENTS

■ STARTING THE ENGINE 220
- □ Automatic Transmission 220
- □ Keyless Enter-N-Go — Ignition 221
- □ Normal Starting 221
- □ Cold Weather Operation (Below –22°F Or –30°C) 224
- □ If Engine Fails To Start 224
- □ After Starting. 225

■ ENGINE BLOCK HEATER — IF EQUIPPED 225

■ ENGINE BREAK-IN RECOMMENDATIONS 225

■ PARKING BRAKE 226

■ AUTOMATIC TRANSMISSION 228
- □ Ignition Park Interlock 229
- □ Brake/Transmission Shift Interlock System 230
- □ Eight-Speed Automatic Transmission 230

■ SPORT MODE — IF EQUIPPED 239

■ FUEL SAVER TECHNOLOGY 5.7L ONLY — IF EQUIPPED. 239

■ POWER STEERING 239

■ SPEED CONTROL — IF EQUIPPED 241
- □ To Activate 241
- □ To Set A Desired Speed 242
- □ To Vary The Speed Setting 242
- □ To Accelerate For Passing 243
- □ To Resume Speed 243
- □ To Deactivate 243

■ ADAPTIVE CRUISE CONTROL (ACC) — IF EQUIPPED 244
- □ Adaptive Cruise Control (ACC) Operation 246

- Activating Adaptive Cruise Control (ACC) 246
- To Activate/Deactivate 247
- To Set A Desired ACC Speed 248
- To Cancel 248
- To Turn Off 249
- To Resume 249
- To Vary The ACC Speed 249
- Setting The Following Distance In ACC 252
- Overtake Aid 254
- ACC Operation At Stop 254
- Adaptive Cruise Control (ACC) Menu 255
- Display Warnings And Maintenance 256
- Precautions While Driving With ACC. 258
- General Information 261
- Normal (Fixed Speed) Cruise Control Mode 261

■ PARKSENSE FRONT AND REAR PARK ASSIST — IF EQUIPPED 264

- ParkSense Sensors 265
- ParkSense Warning Display. 265
- ParkSense Display 265
- Enabling And Disabling ParkSense 272
- Service The ParkSense Park Assist System 272
- Cleaning The ParkSense System. 273
- ParkSense System Usage Precautions 273

■ LANESENSE — IF EQUIPPED 275

- LaneSense Operation 275
- Turning LaneSense On Or Off 276
- LaneSense Warning Message 276
- Changing LaneSense Status. 278

■ PARKVIEW REAR BACK UP CAMERA 279

■ REFUELING THE VEHICLE 281

- Emergency Fuel Filler Door Release 283

■ VEHICLE LOADING 285

- Vehicle Certification Label 285

- Gross Vehicle Weight Rating (GVWR) 285
- Gross Axle Weight Rating (GAWR) 285
- Overloading 285
- Loading 286

■ TRAILER TOWING 286

- Common Towing Definitions. 286
- Trailer Hitch Classification 288
- Trailer Towing Weights (Maximum Trailer Weight Ratings) 289
- Trailer And Tongue Weight 290
- Towing Requirements 291
- Towing Tips 295

■ RECREATIONAL TOWING (BEHIND MOTORHOME, ETC.) 296

■ DRIVING TIPS 296

- Driving On Slippery Surfaces 296
- Driving Through Water 297

STARTING THE ENGINE

Before starting your vehicle, adjust your seat, adjust the inside and outside mirrors, fasten your seat belt, and if present, instruct all other occupants to buckle their seat belts.

WARNING!

- **When exiting the vehicle, always make sure the ignition is in "OFF" mode, remove the key fob from the vehicle and lock the vehicle.**
- **Never leave children alone in a vehicle, or with access to an unlocked vehicle. Leaving children in a vehicle unattended is dangerous for a number of reasons. A child or others could be seriously or fatally injured. Children should be warned not to touch the parking brake, brake pedal or the transmission gear selector.**
- **Do not leave the key fob in or near the vehicle (or in a location accessible to children), and do not leave the ignition (of a vehicle equipped with Keyless Enter-N-Go) in the ACC or ON/RUN mode. A child could operate power windows, other controls, or move the vehicle.**

(Continued)

WARNING! ***(Continued)***

- **Do not leave children or animals inside parked vehicles in hot weather. Interior heat build-up may cause serious injury or death.**

Automatic Transmission

The gear selector must be in the PARK position before you can start the engine. Apply the brakes before shifting into any driving gear.

CAUTION!

Damage to the transmission may occur if the following precautions are not observed:

- **Shift into or out of PARK or REVERSE only after the vehicle has come to a complete stop.**
- **Do not shift between PARK, REVERSE, NEUTRAL, or DRIVE when the engine is above idle speed.**
- **Before shifting into any gear, make sure your foot is firmly pressing the brake pedal.**

Keyless Enter-N-Go — Ignition

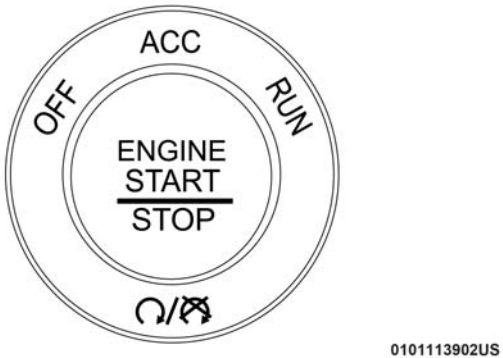

Keyless Push Button Ignition

This feature allows the driver to operate the ignition switch with the push of a button, as long as the Remote Start/ Keyless Enter-N-Go key fob is in the passenger compartment.

Normal Starting

To Turn On The Engine Using The ENGINE START/ STOP Button

1. The transmission must be in PARK.
2. Press and hold the brake pedal while pushing the ENGINE START/STOP button once.
3. The system takes over and attempts to start the vehicle. If the vehicle fails to start, the starter will disengage automatically after 10 seconds.
4. If you wish to stop the cranking of the engine prior to the engine starting, push the button again.

NOTE: Normal starting of either a cold or a warm engine is obtained without pumping or pressing the accelerator pedal.

To Turn Off The Engine Using ENGINE START/STOP Button

1. Place the gear selector in PARK, then push and release the ENGINE START/STOP button.
2. The ignition will return to the OFF mode.
3. If the gear selector is not in PARK, the ENGINE START/ STOP button must be held for two seconds or three short pushes in a row with the vehicle speed above 5 MPH (8 km/h) before the engine will shut off. The ignition will remain in the ACC mode until the gear selector is in PARK and the button is pushed twice to the OFF mode.

4. If the gear selector is not in PARK and the ENGINE START/STOP button is pushed once with the vehicle speed above 5 MPH (8 km/h), the instrument cluster will display a " **Vehicle Not In Park**" message and the engine will remain running. Never leave a vehicle out of the PARK position, or it could roll.

NOTE: If the gear selector is not in PARK, and the ENGINE START/STOP button is pushed once with the vehicle speed below 5 MPH (8 km/h), the engine will shut off and the ignition will remain in the ACC position. If vehicle speed drops below 1.2 MPH (1.9 km/h), the vehicle will AutoPark. See AutoPark section for further details.

ENGINE START/STOP Button Functions — With Driver's Foot OFF The Brake Pedal (In PARK Or NEUTRAL Position)

The ENGINE START/STOP button operates similar to an ignition switch. It has three modes: OFF, ACC, and RUN. To change the ignition modes without starting the vehicle and use the accessories, follow these directions:

1. Start with the ignition in the OFF mode.
2. Push the ENGINE START/STOP button once to place the ignition to the ACC mode.
3. Push the ENGINE START/STOP button a second time to place the ignition to the RUN mode.
4. Push the ENGINE START/STOP button a third time to return the ignition to the OFF mode.

AutoPark

AutoPark is a supplemental feature to assist in placing the vehicle in PARK should the situations on the following pages occur. It is a back up system and should not be relied upon as the primary method by which the driver shifts the vehicle into PARK.

The conditions under which AutoPark will engage are outlined on the following pages.

WARNING!

- **Driver inattention could lead to failure to place the vehicle in PARK. ALWAYS DO A VISUAL CHECK that your vehicle is in PARK by verifying that a solid (not blinking) "P" is indicated in the instrument cluster display and near the gear selector. If the "P" indicator is blinking, your vehicle is not in PARK. As an added precaution, always apply the parking brake when exiting the vehicle.**

(Continued)

WARNING! ***(Continued)***

- **AutoPark is a supplemental feature. It is not designed to replace the need to shift your vehicle into PARK. It is a back up system and should not be relied upon as the primary method by which the driver shifts the vehicle into PARK.**

If the vehicle is not in PARK and the driver turns off the engine, the vehicle may AutoPark.

AutoPark will engage when all of these conditions are met:

- Vehicle is equipped with a rotary selector and an 8-speed transmission
- Vehicle is not in PARK
- Vehicle Speed is 1.2 MPH (1.9 km/h) or less
- Ignition switched from RUN to ACC

NOTE: For Keyless Go equipped vehicles, The engine will turn off and the ignition switch will change to ACC Mode. After 30 minutes the ignition switches to OFF automatically, unless the driver turns the ignition switch OFF.

If the vehicle is not in PARK and the driver exits the vehicle with the engine running, the vehicle may AutoPark.

AutoPark will engage when all of these conditions are met:

- Vehicle is equipped with a rotary selector and an 8-speed transmission
- Vehicle is not in PARK
- Vehicle speed is 1.2 MPH (1.9 km/h) or less
- Driver's seat belt is unbuckled
- Driver's door is ajar
- Brake Pedal is not depressed

The MESSAGE " **AutoPark Engaged Shift to P then Shift to Gear**"will display in the instrument cluster.

NOTE: In some cases the ParkSense graphic will be displayed in the instrument cluster. In these cases, the gear selector must be returned to "P" to select desired gear.

If the driver shifts into PARK while moving, the vehicle may AutoPark.

AutoPark will engage **ONLY** when vehicle speed is 1.2 MPH (1.9 km/h) or less.

The MESSAGE " **Vehicle Speed is Too High to Shift to P**" will be displayed in the instrument cluster if vehicle speed is above 1.2 MPH (1.9 km/h).

WARNING!

If vehicle speed is above 1.2 MPH (1.9 km/h), the transmission will default to NEUTRAL until the vehicle speed drops below 1.2 MPH (1.9 km). A vehicle left in the NEUTRAL position can roll. As an added precaution, always apply the parking brake when exiting the vehicle.

ALWAYS DO A VISUAL CHECK that your vehicle is in PARK by looking for the "P" in the instrument cluster display and near the gear selector. As an added precaution, always apply the parking brake when exiting the vehicle.

Cold Weather Operation (Below –22°F Or −30°C)

To ensure reliable starting at these temperatures, use of an externally powered electric engine block heater (available from your authorized dealer) is recommended.

If Engine Fails To Start

If the engine fails to start after you have followed the "Normal Starting" or "Extreme Cold Weather" procedure it may be flooded. Push the accelerator pedal all the way to the floor and hold it there. Crank the engine for no more than 15 seconds. This should clear any excess fuel in case the engine is flooded. Leave the ignition key in the RUN position, release the accelerator pedal and repeat the "Normal Starting" procedure.

WARNING!

- **Never pour fuel or other flammable liquid into the throttle body air inlet opening in an attempt to start the vehicle. This could result in flash fire causing serious personal injury.**
- **Do not attempt to push or tow your vehicle to get it started. Vehicles equipped with an automatic transmission cannot be started this way. Unburned fuel could enter the catalytic converter and once the engine has started, ignite and damage the converter and vehicle.**
- **If the vehicle has a discharged battery, booster cables may be used to obtain a start from a booster battery or the battery in another vehicle. This type of start can be dangerous if done improperly. Refer to "Jump Starting Procedure" in "In Case Of Emergency" for further information.**

CAUTION!

To prevent damage to the starter, do not continuously crank the engine for more than 25 seconds at a time. Wait 60 seconds before trying again.

After Starting

The idle speed is controlled automatically, and it will decrease as the engine warms up.

ENGINE BLOCK HEATER — IF EQUIPPED

The engine block heater warms the engine, and permits quicker starts in cold weather. Connect the cord to a standard 110-115 Volt AC electrical outlet with a grounded, three-wire extension cord.

The engine block heater must be plugged in at least one hour to have an adequate warming effect on the engine.

The engine block heater cord is routed under the hood on the driver side of the vehicle. It has a removable cap that is located near the air box.

WARNING!

Remember to disconnect the engine block heater cord before driving. Damage to the 110-115 Volt electrical cord could cause electrocution.

ENGINE BREAK-IN RECOMMENDATIONS

A long break-in period is not required for the drivetrain (engine, transmission, clutch, and rear axle) in your new vehicle.

Drive moderately during the first 300 miles (500 km). After the initial 60 miles (100 km), speeds up to 50 or 55 mph (80 or 90 km/h) are desirable.

While cruising, brief full-throttle acceleration within the limits of local traffic laws contributes to a good break-in. However, wide-open throttle acceleration in low gear can be detrimental and should be avoided.

The engine oil, transmission fluid, and axle lubricant installed at the factory is high-quality and energy-conserving. Oil, fluid, and lubricant changes should be consistent with anticipated climate and conditions under which vehicle operations will occur. For the recommended viscosity and quality grades, refer to “Fluids And Lubricants” in “Technical Specifications”.

CAUTION!

Never use Non-Detergent Oil or Straight Mineral Oil in the engine or damage may result.

NOTE: A new engine may consume some oil during its first few thousand miles (kilometers) of operation. This should be considered a normal part of the break-in and not interpreted as an indication of difficulty. Please check your oil level with the engine oil indicator often during the break in period. Add oil as required.

PARKING BRAKE

Before leaving the vehicle, make sure that the parking brake is fully applied and place the gear selector in the PARK position.

The foot operated parking brake is located below the lower left corner of the instrument panel. To apply the park brake, firmly push the park brake pedal fully. To release the parking brake, press the park brake pedal a second time and let your foot up as you feel the brake disengage.

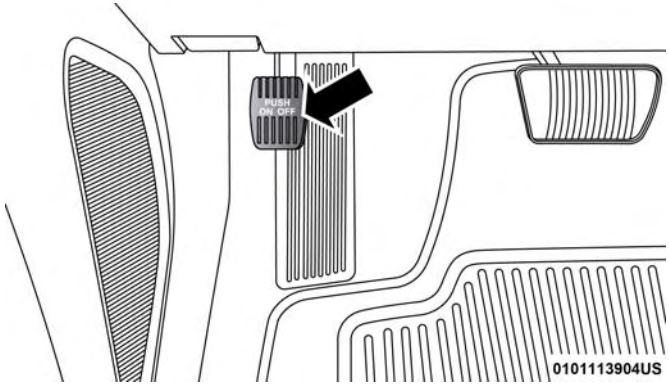

Parking Brake

When the parking brake is applied with the ignition switch in the ON/RUN position, the Brake Warning Light in the instrument cluster will illuminate.

NOTE:

- When the parking brake is applied and the transmission is placed in gear, the Brake Warning Light will flash. If vehicle speed is detected, a chime will sound to alert the driver. Fully release the parking brake before attempting to move the vehicle.
- This light only shows that the parking brake is applied. It does not show the degree of brake application.

When parking on a hill, it is important to turn the front wheels toward the curb on a downhill grade and away from the curb on an uphill grade. Apply the parking brake before placing the gear selector in PARK, otherwise the load on the transmission locking mechanism may make it difficult to move the gear selector out of PARK. The parking brake should always be applied whenever the driver is not in the vehicle.

WARNING!

- **Never use the PARK position as a substitute for the parking brake. Always apply the parking brake fully when parked to guard against vehicle movement and possible injury or damage.**
- **When exiting the vehicle, always remove the key fob from the ignition and lock your vehicle.**
- **Never leave children alone in a vehicle, or with access to an unlocked vehicle. Allowing children to be in a vehicle unattended is dangerous for a number of reasons. A child or others could be seriously or fatally injured. Children should be warned not to touch the parking brake, brake pedal or the gear selector.**

(Continued)

WARNING! ***(Continued)***

- **When exiting the vehicle, always make sure the keyless ignition node is in the OFF mode, remove the key fob from the vehicle and lock the vehicle.**
- **Do not leave the key fob in or near the vehicle or in a location accessible to children, and do not leave the ignition of a vehicle equipped with Keyless Enter-N-Go in the ACC or ON/RUN mode. A child could operate power windows, other controls, or move the vehicle.**
- **Be sure the parking brake is fully disengaged before driving; failure to do so can lead to brake failure and a collision.**
- **Always fully apply the parking brake when leaving your vehicle, or it may roll and cause damage or injury. Also be certain to leave the transmission in PARK. Failure to do so may allow the vehicle to roll and cause damage or injury.**

CAUTION!

If the Brake Warning Light remains on with the parking brake released, a brake system malfunction is indicated. Have the brake system serviced by an authorized dealer immediately.

AUTOMATIC TRANSMISSION

WARNING!

- **Never use the PARK position as a substitute for the parking brake. Always apply the parking brake fully when exiting the vehicle to guard against vehicle movement and possible injury or damage.**
- **Your vehicle could move and injure you and others if it is not in PARK. Check by trying to move the transmission gear selector out of PARK with the brake pedal released. Make sure the transmission is in PARK before exiting the vehicle.**
- **The transmission may not engage PARK if the vehicle is moving. Always bring the vehicle to a complete stop before shifting to PARK, and verify that the transmission gear position indicator solidly**

(Continued)

WARNING! ***(Continued)***

indicates PARK (P) without blinking. Ensure that the vehicle is completely stopped, and the PARK position is properly indicated, before exiting the vehicle.
- **It is dangerous to shift out of PARK or NEUTRAL if the engine speed is higher than idle speed. If your foot is not firmly pressing the brake pedal, the vehicle could accelerate quickly forward or in reverse. You could lose control of the vehicle and hit someone or something. Only shift into gear when the engine is idling normally and your foot is firmly pressing the brake pedal.**
- **Unintended movement of a vehicle could injure those in or near the vehicle. As with all vehicles, you should never exit a vehicle while the engine is running. Before exiting a vehicle, always come to a complete stop, then apply the parking brake, shift the transmission into PARK, and turn the ignition OFF. When the ignition is in the OFF mode, the transmission is locked in PARK, securing the vehicle against unwanted movement.**

(Continued)

WARNING! *(Continued)*

- **When exiting the vehicle, always make sure the ignition is in the OFF mode, remove the key fob from the vehicle, and lock the vehicle.**
- **Never leave children alone in a vehicle, or with access to an unlocked vehicle. Allowing children to be in a vehicle unattended is dangerous for a number of reasons. A child or others could be seriously or fatally injured. Children should be warned not to touch the parking brake, brake pedal or the transmission gear selector.**
- **Do not leave the key fob in or near the vehicle (or in a location accessible to children), and do not leave the ignition in the ACC or ON/RUN mode. A child could operate power windows, other controls, or move the vehicle.**

CAUTION!

Damage to the transmission may occur if the following precautions are not observed:

- **Shift into or out of PARK or REVERSE only after the vehicle has come to a complete stop.**

(Continued)

CAUTION! *(Continued)*

- **Do not shift between PARK, REVERSE, NEUTRAL, or DRIVE when the engine is above idle speed.**
- **Before shifting into any gear, make sure your foot is firmly pressing the brake pedal.**

NOTE: You must press and hold the brake pedal while shifting out of PARK.

Ignition Park Interlock

6

This vehicle is equipped with an Ignition Park Interlock which requires the transmission to be in PARK before the ignition can be turned to the OFF mode. This helps the driver avoid inadvertently leaving the vehicle without placing the transmission in PARK. This system also locks the transmission in PARK whenever the ignition is in the OFF mode.

NOTE: The transmission is NOT locked in PARK when the ignition is in the ACC mode (even though the engine will be off). Ensure that the transmission is in PARK, and the ignition is **OFF** (not in ACC mode) before exiting the vehicle.

Brake/Transmission Shift Interlock System

This vehicle is equipped with a Brake Transmission Shift Interlock system (BTSI) that holds the transmission gear selector in PARK unless the brakes are applied. To shift the transmission out of PARK, the engine must be running and the brake pedal must be pressed. The brake pedal must also be pressed to shift from NEUTRAL into DRIVE or REVERSE when the vehicle is stopped or moving at low speeds.

Eight-Speed Automatic Transmission

WARNING!

- **Never use the PARK position as a substitute for the parking brake. Always apply the parking brake fully when exiting the vehicle to guard against vehicle movement and possible injury or damage.**
- **Your vehicle could move and injure you and others if it is not in PARK. Check by trying to move the transmission gear selector out of PARK with the brake pedal released. Make sure the transmission is in PARK before exiting the vehicle.**

(Continued)

WARNING! ***(Continued)***

- **The transmission may not engage PARK if the vehicle is moving. Always bring the vehicle to a complete stop before shifting to PARK, and verify that the transmission gear position indicator solidly indicates PARK (P) without blinking. Ensure that the vehicle is completely stopped, and the PARK position is properly indicated, before exiting the vehicle.**
- **It is dangerous to shift out of PARK or NEUTRAL if the engine speed is higher than idle speed. If your foot is not firmly pressing the brake pedal, the vehicle could accelerate quickly forward or in reverse. You could lose control of the vehicle and hit someone or something. Only shift into gear when the engine is idling normally and your foot is firmly pressing the brake pedal.**
- **Unintended movement of a vehicle could injure those in or near the vehicle. As with all vehicles, you should never exit a vehicle while the engine is running. Before exiting a vehicle, always come to a complete stop, then apply the parking brake, shift the transmission into PARK, and turn the ignition OFF. When the ignition is in the OFF mode, the transmission is locked in PARK, securing the vehicle against unwanted movement.**

(Continued)

WARNING! ***(Continued)***

- **When exiting the vehicle, always make sure the ignition is in the OFF mode, remove the key fob from the vehicle, and lock the vehicle.**
- **Never leave children alone in a vehicle, or with access to an unlocked vehicle. Allowing children to be in a vehicle unattended is dangerous for a number of reasons. A child or others could be seriously or fatally injured. Children should be warned not to touch the parking brake, brake pedal or the transmission gear selector.**
- **Do not leave the key fob in or near the vehicle (or in a location accessible to children), and do not leave the ignition in the ACC or ON/RUN mode. A child could operate power windows, other controls, or move the vehicle.**

The transmission is controlled using a rotary electronic gear selector located on the center console. The transmission gear range (PRNDL/S) is displayed both above the gear selector and in the instrument cluster. To select a gear range, simply rotate the gear selector. To access the L or S position, push down on the gear selector and then rotate it. You must also press the brake pedal to shift the transmission out of PARK (or NEUTRAL, when the vehicle is stopped or moving at low speeds). To shift past multiple gear ranges at once (such as PARK to DRIVE), simply rotate the gear selector to the appropriate detent. Select the DRIVE range for normal driving.

NOTE: In the event of a mismatch between the gear selector position and the actual transmission gear (for example, driver selects PARK while driving), the position indicator will blink continuously until the selector is returned to the proper position, or the requested shift can be completed.

The electronically-controlled transmission adapts its shift schedule based on driver inputs, along with environmental and road conditions. The transmission electronics are self-calibrating; therefore, the first few shifts on a new vehicle may be somewhat abrupt. This is a normal condition, and precision shifts will develop within a few hundred miles (kilometers).

Only shift from DRIVE to PARK or REVERSE when the accelerator pedal is released and the vehicle is stopped. Be sure to keep your foot on the brake pedal when shifting between these gears.

Standard Gear Selector

The standard transmission gear selector has PARK, REVERSE, NEUTRAL, DRIVE, and LOW shift positions. Using the LOW position manually downshifts the transmission to a lower gear based on vehicle speed.

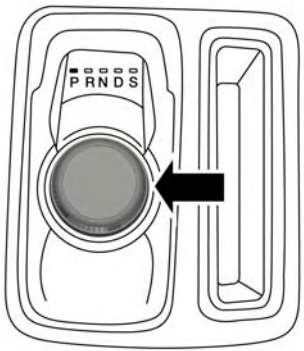

0101115691US

Gear Selector

Premium Gear Selector With AutoStick

The premium transmission gear selector provides PARK, REVERSE, NEUTRAL, DRIVE, and SPORT shift positions. Manual shifts can be made using the AutoStick shift control (shift paddles mounted on the steering wheel). Pressing the shift paddles (-/+) while in the DRIVE or SPORT position will manually select the transmission gear, and will display the current gear in the instrument cluster as 1, 2, 3, etc. Refer to "AutoStick" in this section for further information.

Gear Ranges

Do not depress the accelerator pedal when shifting from PARK or NEUTRAL into another gear range.

NOTE: After selecting any gear range, wait a moment to allow the selected gear to engage before accelerating. This is especially important when the engine is cold.

PARK (P)

This range supplements the parking brake by locking the transmission. The engine can be started in this range. Never attempt to use PARK while the vehicle is in motion. Apply the parking brake when exiting the vehicle in this range.

When parking on a level surface, you may shift the transmission into PARK first, and then apply the parking brake.

When parking on a hill, apply the parking brake before shifting the transmission to PARK. As an added precaution, turn the front wheels toward the curb on a downhill grade and away from the curb on an uphill grade.

When exiting the vehicle, always:

- Apply the parking brake.
- Shift the transmission into PARK.
- Turn the ignition OFF.
- Remove the key fob from the vehicle.

WARNING!

- **Never use the PARK position as a substitute for the parking brake. Always apply the parking brake fully when exiting the vehicle to guard against vehicle movement and possible injury or damage.**
- **Your vehicle could move and injure you and others if it is not in PARK. Check by trying to move the transmission gear selector out of PARK with the brake pedal released. Make sure the transmission is in PARK before exiting the vehicle.**

(Continued)

WARNING! ***(Continued)***

- **The transmission may not engage PARK if the vehicle is moving. Always bring the vehicle to a complete stop before shifting to PARK, and verify that the transmission gear position indicator solidly indicates PARK (P) without blinking. Ensure that the vehicle is completely stopped, and the PARK position is properly indicated, before exiting the vehicle.**
- **It is dangerous to shift out of PARK or NEUTRAL if the engine speed is higher than idle speed. If your foot is not firmly pressing the brake pedal, the vehicle could accelerate quickly forward or in reverse. You could lose control of the vehicle and hit someone or something. Only shift into gear when the engine is idling normally and your foot is firmly pressing the brake pedal.**
- **Unintended movement of a vehicle could injure those in or near the vehicle. As with all vehicles, you should never exit a vehicle while the engine is running. Before exiting a vehicle, always come to a complete stop, then apply the parking brake, shift the transmission into PARK, and turn the ignition OFF. When the ignition is in the OFF mode, the transmission is locked in PARK, securing the vehicle against unwanted movement.**

(Continued)

WARNING! *(Continued)*

- **When exiting the vehicle, always make sure the ignition is in the OFF mode, remove the key fob from the vehicle, and lock the vehicle.**
- **Never leave children alone in a vehicle, or with access to an unlocked vehicle. Allowing children to be in a vehicle unattended is dangerous for a number of reasons. A child or others could be seriously or fatally injured. Children should be warned not to touch the parking brake, brake pedal or the transmission gear selector.**
- **Do not leave the key fob in or near the vehicle (or in a location accessible to children), and do not leave the ignition in the ACC or ON/RUN mode. A child could operate power windows, other controls, or move the vehicle.**

CAUTION!

- **Before moving the transmission gear selector out of PARK, you must start the engine, and also press the brake pedal. Otherwise, damage to the gear selector could result.**

(Continued)

CAUTION! *(Continued)*

- **DO NOT race the engine when shifting from PARK or NEUTRAL into another gear range, as this can damage the drivetrain.**

The following indicators should be used to ensure that you have properly engaged the transmission into the PARK position:

- Look at the transmission gear position display and verify that it indicates the PARK position (P), and is not blinking.
- With the brake pedal released, verify that the gear selector will not move out of PARK.

REVERSE (R)

This range is for moving the vehicle backward. Shift into REVERSE only after the vehicle has come to a complete stop.

NEUTRAL (N)

Use this range when the vehicle is standing for prolonged periods with the engine running. Apply the parking brake and shift the transmission into PARK if you must exit the vehicle.

WARNING!

Do not coast in NEUTRAL and never turn off the ignition to coast down a hill. These are unsafe practices that limit your response to changing traffic or road conditions. You might lose control of the vehicle and have a collision.

CAUTION!

Towing the vehicle, coasting, or driving for any other reason with the transmission in NEUTRAL can cause severe transmission damage.
Refer to "Recreational Towing" in "Starting And Operating" and "Towing A Disabled Vehicle" in "In Case Of Emergency" for further information.

DRIVE (D)

This range should be used for most city and highway driving. It provides the smoothest upshifts and downshifts, and the best fuel economy. The transmission automatically upshifts through all forward gears. The DRIVE position provides optimum driving characteristics under all normal operating conditions.

When frequent transmission shifting occurs (such as when operating the vehicle under heavy loading conditions, in hilly terrain, traveling into strong head winds, or while towing a heavy trailer), use the AutoStick shift control (if equipped, refer to "AutoStick" in this section for further information) to select a lower gear. Under these conditions, using a lower gear will improve performance and extend transmission life by reducing excessive shifting and heat buildup.

During extremely cold temperatures (-22°F [-30°C] or below), transmission operation may be modified depending on engine and transmission temperature as well as vehicle speed. Normal operation will resume once the transmission temperature has risen to a suitable level.

SPORT (S) — If Equipped

This mode alters the transmission's automatic shift schedule for sportier driving. Upshift speeds are increased to make full use of available engine power.

To access SPORT mode, push down on the gear selector and rotate it fully clockwise, or push the SPORT button in the center stack.

LOW (L) — If Equipped

Use this range for engine braking when descending very steep grades. In this range, the transmission will downshift for increased engine braking. To access the LOW position, push down on the gear selector and rotate it fully clockwise.

Transmission Limp Home Mode

Transmission function is monitored electronically for abnormal conditions. If a condition is detected that could result in transmission damage, Transmission Limp Home Mode is activated. In this mode, the transmission may operate only in certain gears, or may not shift at all. Vehicle performance may be severely degraded and the engine may stall. In some situations, the transmission may not re-engage if the engine is turned off and restarted. The Malfunction Indicator Light (MIL) may be illuminated. A message in the instrument cluster will inform the driver of the more serious conditions, and indicate what actions may be necessary.

In the event of a momentary problem, the transmission can be reset to regain all forward gears by performing the following steps:

NOTE: In cases where the instrument cluster message indicates the transmission may not re-engage after engine shutdown, perform this procedure only in a desired location (preferably, at an authorized dealer).

1. Stop the vehicle.
2. Shift the transmission into PARK, if possible. If not, shift the transmission to NEUTRAL.
3. Push and hold the ignition switch until the engine turns OFF.
4. Wait approximately 30 seconds.
5. Restart the engine.
6. Shift into the desired gear range. If the problem is no longer detected, the transmission will return to normal operation.

NOTE: Even if the transmission can be reset, we recommend that you visit an authorized dealer at your earliest possible convenience. An authorized dealer has diagnostic equipment to assess the condition of your transmission.

If the transmission cannot be reset, authorized dealer service is required.

AutoStick — If Equipped

AutoStick is a driver-interactive transmission feature providing manual shift control, giving you more control of the vehicle. AutoStick allows you to maximize engine braking, eliminate undesirable upshifts and downshifts, and improve overall vehicle performance.

This system can also provide you with more control during passing, city driving, cold slippery conditions, mountain driving, trailer towing, and many other situations.

Operation

When the transmission is in DRIVE or SPORT mode, it will operate automatically, shifting between the eight available gears. To engage AutoStick, simply tap one of the steering wheel-mounted shift paddles (+/-) while in DRIVE or SPORT mode. In DRIVE mode, this will activate a temporary AutoStick mode. The transmission will revert back to normal operation after a period of time, depending on accelerator pedal activity. When the transmission gear selector is in the SPORT position, tapping either shift paddle will activate "permanent" AutoStick mode. The transmission will remain in AutoStick mode until the driver deliberately disables AutoStick (as described below). Tapping (-) to enter AutoStick will downshift the transmission to the next lower gear, while using (+) to enter AutoStick will retain the current gear. When AutoStick is active, the current transmission gear is displayed in the instrument cluster.

In AutoStick mode, the transmission will shift up or down when (+/-) is manually selected by the driver, unless an engine lugging or overspeed condition would result. It will remain in the selected gear until another upshift or downshift is chosen, except as described below.

- If AutoStick is engaged while in DRIVE mode, the transmission will automatically shift up when maximum engine speed is reached. If the accelerator is fully depressed, the transmission will downshift when possible (based on current vehicle speed and gear). Lack of accelerator pedal activity will cause the transmission to revert to automatic operation.
- If AutoStick is engaged while the transmission gear selector is in the SPORT position, manual gear selection will be maintained until the gear selector is returned to DRIVE, or as described below. The transmission will not upshift automatically at redline in this mode, nor will downshifts be obtained if the accelerator pedal is pressed to the floor.

- In either DRIVE or SPORT mode, the transmission will automatically downshift as the vehicle slows (to prevent engine lugging) and will display the current gear.
- The transmission will automatically downshift to first gear when coming to a stop. After a stop, the driver should manually upshift (+) the transmission as the vehicle is accelerated.
- You can start out, from a stop, in first or second gear. Tapping (+) at a stop will allow starting in second gear. Starting out in second gear can be helpful in snowy or icy conditions.
- If a requested downshift would cause the engine to over-speed, that shift will not occur.
- The system will ignore attempts to upshift at too low of a vehicle speed.
- Holding the (-) paddle depressed will downshift the transmission to the lowest gear possible at the current speed.
- Transmission shifting will be more noticeable when AutoStick is enabled.
- The system may revert to automatic shift mode if a fault or overheat condition is detected.

To disengage AutoStick mode, press and hold the (+) shift paddle until "D" or "S" is once again indicated in the instrument cluster. Shifting out of SPORT mode will also disable AutoStick. You can shift in or out of AutoStick mode at any time without taking your foot off the accelerator pedal.

WARNING!

Do not downshift for additional engine braking on a slippery surface. The drive wheels could lose their grip and the vehicle could skid, causing a collision or personal injury.

SPORT MODE — IF EQUIPPED

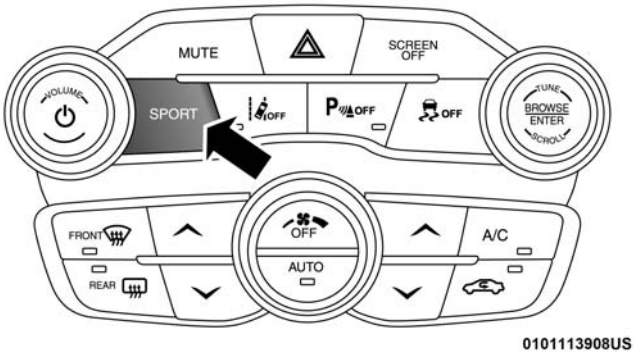

Sport Mode Button

Your vehicle is equipped with a Sport Mode feature. This mode is a configuration set up for typical enthusiast driving. The engine, transmission and steering systems are all set to their SPORT settings. Sport Mode will provide improved throttle response and modified shifting for an enhanced driving experience, as well the greatest amount of steering feel. This mode may be activated and deactivated by pushing the Sport button on the instrument panel switch bank.

FUEL SAVER TECHNOLOGY 5.7L ONLY — IF EQUIPPED

This feature offers improved fuel economy by shutting off four of the engine's eight cylinders during light load and cruise conditions. The system is automatic with no driver inputs or additional driving skills required.

NOTE: This system may take some time to return to full functionality after a battery disconnect.

POWER STEERING

The electric power steering system will give you good vehicle response and increased ease of maneuverability in tight spaces. The system will vary its assist to provide light efforts while parking and good feel while driving. If the electric steering system experiences a fault that prevents it from providing assist, you will still have the ability to steer the vehicle manually.

WARNING!

Continued operation with reduced assist could pose a safety risk to yourself and others. Service should be obtained as soon as possible.

Alternate electric power steering efforts can be selected through the Uconnect System. Refer to "Customer Programmable Features" within "Uconnect Settings" in "Multimedia" for further information.

If the Electric Power Steering warning icon is displayed and the "SERVICE POWER STEERING" or the "POWER STEERING ASSIST OFF – SERVICE SYSTEM" message is displayed within the instrument cluster display, this indicates the vehicle needs to be taken to the dealer for service. Refer to "Warning Lights And Messages" in "Getting To Know Your Instrument Panel" for further information.

NOTE:

- Even if the power steering assistance is no longer operational, it is still possible to steer the vehicle. Under these conditions there will be a substantial increase in steering effort, especially at low speeds and during parking maneuvers.
- If the condition persists, see your authorized dealer for service.

If the Steering icon is displayed and the "POWER STEERING SYSTEM OVER TEMP" message is displayed on the instrument cluster screen, they indicate that extreme steering maneuvers may have occurred which caused an over temperature condition in the power steering system. Once driving conditions are safe, pull over and let the vehicle idle for a few moments until the icon and message turn off.

SPEED CONTROL — IF EQUIPPED

When engaged, the Speed Control takes over accelerator operations at speeds greater than 25 mph (40 km/h).

The Speed Control buttons are located on the right side of the steering wheel.

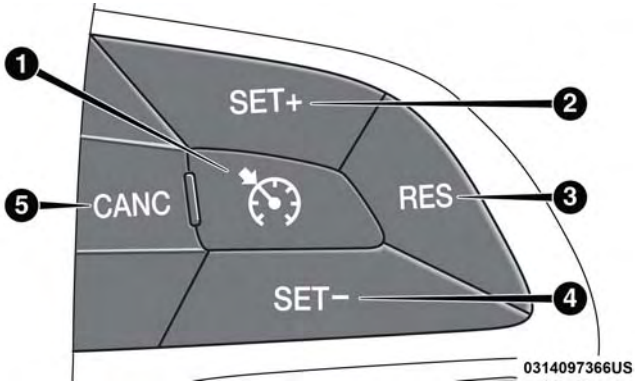

Speed Control Buttons

1 — On/Off
2 — SET (+)/Accel
3 — RES/Resume
4 — SET (-)/Decel
5 — CANC/Cancel

NOTE: In order to ensure proper operation, the Speed Control System has been designed to shut down if multiple Speed Control functions are operated at the same time. If this occurs, the Speed Control System can be reactivated by pushing the Speed Control on/off button and resetting the desired vehicle set speed.

To Activate

Push the on/off button to activate the Speed Control. "CRUISE CONTROL READY" will appear in the instrument cluster display to indicate the Speed Control is on. To turn the system off, push the on/off button a second time. "CRUISE CONTROL OFF" will appear in the instrument cluster display to indicate the Speed Control is off. The system should be turned off when not in use.

WARNING!

Leaving the Speed Control system on when not in use is dangerous. You could accidentally set the system or cause it to go faster than you want. You could lose control and have an accident. Always leave the system OFF when you are not using it.

To Set A Desired Speed

Turn the Speed Control on. When the vehicle has reached the desired speed, push the SET (+) or SET (-) button and release. Release the accelerator and the vehicle will operate at the selected speed. Once a speed has been set, a message "CRUISE CONTROL SET TO MPH (km/h)" will appear indicating what speed was set. A cruise indicator lamp, along with set speed will also appear and stay on in the instrument cluster when the speed is set.

To Vary The Speed Setting

To Increase Speed

When the Speed Control is set, you can increase speed by pushing the SET **(+)** button.

The driver's preferred units can be selected through the instrument cluster display. Refer to "Getting To Know Your Instrument Panel" for more information. The speed increment shown is dependant on the chosen speed unit of U.S. (mph) or Metric (km/h):

U.S. Speed (mph)

- Pushing the SET **(+)** button once will result in a 1 mph increase in set speed. Each subsequent tap of the button results in an increase of 1 mph.
- If the button is continually pushed, the set speed will continue to increase until the button is released, then the new set speed will be established.

Metric Speed (km/h)

- Pushing the SET **(+)** button once will result in a 1 km/h increase in set speed. Each subsequent tap of the button results in an increase of 1 km/h.
- If the button is continually pushed, the set speed will continue to increase until the button is released, then the new set speed will be established.

To Decrease Speed

When the Speed Control is set, you can decrease speed by pushing the SET **(-)** button.

The driver's preferred units can be selected through the instrument cluster display. Refer to "Getting To Know Your Instrument Panel" for more information. The speed decrement shown is dependant on the chosen speed unit of U.S. (mph) or Metric (km/h):

U.S. Speed (mph)

- Pushing the SET **(-)** button once will result in a 1 mph decrease in set speed. Each subsequent tap of the button results in a decrease of 1 mph.

- If the button is continually pushed, the set speed will continue to decrease until the button is released, then the new set speed will be established.

Metric Speed (km/h)

- Pushing the SET **(-)** button once will result in a 1 km/h decrease in set speed. Each subsequent tap of the button results in a decrease of 1 km/h.
- If the button is continually pushed, the set speed will continue to decrease until the button is released, then the new set speed will be established.

To Accelerate For Passing

Press the accelerator as you would normally. When the pedal is released, the vehicle will return to the set speed.

Using Speed Control On Hills

The transmission may downshift on hills to maintain the vehicle set speed.

NOTE: The Speed Control system maintains speed up and down hills. A slight speed change on moderate hills is normal.

On steep hills, a greater speed loss or gain may occur so it may be preferable to drive without Speed Control.

WARNING!

Speed Control can be dangerous where the system cannot maintain a constant speed. Your vehicle could go too fast for the conditions, and you could lose control and have an accident. Do not use Speed Control in heavy traffic or on roads that are winding, icy, snow-covered or slippery.

To Resume Speed

To resume a previously set speed, push the RES button and release. Resume can be used at any speed above 20 mph (32 km/h).

To Deactivate

A soft tap on the brake pedal, pushing the CANC button, or normal brake pressure while slowing the vehicle will deactivate the Speed Control without erasing the set speed from memory.

Pushing the on/off button or turning the ignition switch OFF erases the set speed from memory.

ADAPTIVE CRUISE CONTROL (ACC) — IF EQUIPPED

Adaptive Cruise Control (ACC) increases the driving convenience provided by cruise control while traveling on highways and major roadways. However, it is not a safety system and not designed to prevent collisions. **Speed Control function performs differently. Please refer to the proper section within this chapter.**

ACC will allow you to keep cruise control engaged in light to moderate traffic conditions without the constant need to reset your cruise control. ACC utilizes a radar sensor and a forward facing camera designed to detect a vehicle directly ahead of you.

NOTE:

- If the sensor does not detect a vehicle ahead of you, ACC will maintain a fixed set speed.
- If the ACC sensor detects a vehicle ahead, ACC will apply limited braking or accelerate (not to exceed the original set speed) automatically to maintain a preset following distance, while matching the speed of the vehicle ahead.

The Cruise Control system has two control modes:

- Adaptive Cruise Control mode for maintaining an appropriate distance between vehicles.
- Normal (Fixed Speed) Cruise Control mode for cruising at a constant preset speed. For additional information, refer to “Normal (Fixed Speed) Cruise Control Mode” in this section.

NOTE: Normal (Fixed Speed) Cruise Control will not react to preceding vehicles. Always be aware of the mode selected.

You can change the mode by using the Cruise Control buttons. The two control modes function differently. Always confirm which mode is selected.

WARNING!

- Adaptive Cruise Control (ACC) is a convenience system. It is not a substitute for active driving involvement. It is always the driver's responsibility to be attentive of road, traffic, and weather conditions, vehicle speed, distance to the vehicle ahead; and, most importantly, brake operation to ensure safe operation of the vehicle under all road conditions. Your complete attention is always required while driving to maintain safe control of your vehicle. Failure to follow these warnings can result in a collision and death or serious personal injury.
- The ACC system:
  - Does not react to pedestrians, oncoming vehicles, and stationary objects (e.g., a stopped vehicle in a traffic jam or a disabled vehicle).
  - Cannot take street, traffic, and weather conditions into account, and may be limited upon adverse sight distance conditions.
  - Does not always fully recognize complex driving conditions, which can result in wrong or missing distance warnings.

(Continued)

WARNING! *(Continued)*

  - Will bring the vehicle to a complete stop while following a target vehicle and hold the vehicle for 2 seconds in the stop position. If the target vehicle does not start moving within two seconds the ACC system will display a message that the system will release the brakes and that the brakes must be applied manually. An audible chime will sound when the brakes are released.

You should switch off the ACC system:

- When driving in fog, heavy rain, heavy snow, sleet, heavy traffic, and complex driving situations (i.e., in highway construction zones).
- When entering a turn lane or highway off ramp; when driving on roads that are winding, icy, snow-covered, slippery, or have steep uphill or downhill slopes.
- When towing a trailer up or down steep slopes.
- When circumstances do not allow safe driving at a constant speed.

Adaptive Cruise Control (ACC) Operation

The Speed Control buttons (located on the right side of the steering wheel) operates the ACC system.

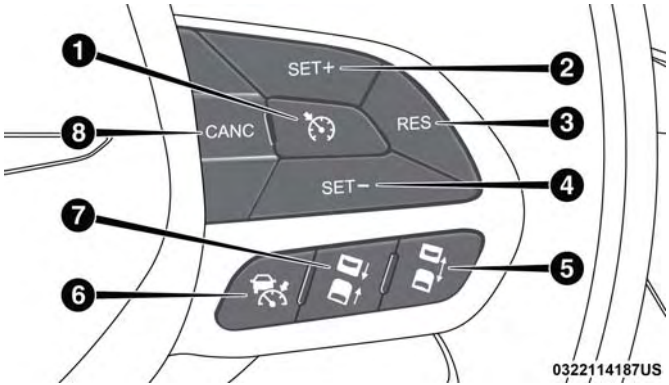

Adaptive Cruise Control Buttons

1 — Normal (Fixed Speed) Cruise Control On/Off	5 — Distance Setting Increase
2 — SET (+)/Accel	6 — Adaptive Cruise Control (ACC) On/Off
3 — RES/Resume	7 — Distance Setting Decrease
4 — SET (-)/Decel	8 — CANC/Cancel

NOTE: Any chassis/suspension or tire size modifications to the vehicle will effect the performance of the Adaptive Cruise Control and Forward Collision Warning System.

Activating Adaptive Cruise Control (ACC)

You can only engage ACC if the vehicle speed is above 0 mph (0 km/h).

The minimum set speed for the ACC system is 20 mph (32 km/h).

When the system is turned on and in the ready state, the instrument cluster displays “ACC Ready.”

When the system is off, the instrument cluster displays “Adaptive Cruise Control (ACC) Off.”

NOTE: You cannot engage ACC under the following conditions:

- When in Four-Wheel Drive Low.
- When you apply the brakes.
- When the parking brake is applied.
- When the automatic transmission is in PARK, REVERSE or NEUTRAL.

- When the vehicle speed is outside of the speed range.
- When the brakes are overheated.
- When the driver's door is open at low speeds.
- When the driver's seat belt is unbuckled at low speeds.

To Activate/Deactivate

Push and release the Adaptive Cruise Control (ACC) on/off button. The ACC menu in the instrument cluster displays "ACC Ready."

0323001278

Adaptive Cruise Control Ready

To turn the system off, push and release the Adaptive Cruise Control (ACC) on/off button again. At this time, the system will turn off and the instrument cluster displays "Adaptive Cruise Control (ACC) Off."

0323001263

Adaptive Cruise Control Off

WARNING!
Leaving the Adaptive Cruise Control (ACC) system on when not in use is dangerous. You could accidentally set the system or cause it to go faster than you want. You could lose control and have a collision. Always leave the system off when you are not using it.

To Set A Desired ACC Speed

When the vehicle reaches the speed desired, push the SET **(+)** button or the SET **(-)** button and release. The instrument cluster display will display the set speed.

If the system is set when the vehicle speed is below 20 mph (32 km/h), the set speed shall be defaulted to 20 mph (32 km/h). If the system is set when the vehicle speed is above 20 mph (32 km/h), the set speed shall be the current speed of the vehicle.

NOTE: ACC cannot be set if there is a stationary vehicle in front of your vehicle in close proximity.

Remove your foot from the accelerator pedal. If you do not, the vehicle may continue to accelerate beyond the set speed. If this occurs:

- The message "DRIVER OVERRIDE" will display in the instrument cluster display.
- The system will not be controlling the distance between your vehicle and the vehicle ahead. The vehicle speed will only be determined by the position of the accelerator pedal.

To Cancel

The following conditions cancel the system:

- The brake pedal is applied.
- The CANC button is pushed.
- An Anti-Lock Brake System (ABS) event occurs.
- The gear selector is removed from the DRIVE position.
- The braking temperature exceeds normal range (overheated).
- The Electronic Stability Control/Traction Control System (ESC/TCS) activates.
- The vehicle parking brake is applied.
- Driver seatbelt is unbuckled at low speeds.
- Driver door is opened at low speeds.

NOTE: If your vehicle stays at standstill for longer than two seconds, then the system will cancel and the brake force will be ramped-out. The driver will have to apply the brakes to keep the vehicle at a standstill.

To Turn Off

The system will turn off and clear the set speed in memory if:

- The Adaptive Cruise Control (ACC) on/off button is pushed.
- The Normal (Fixed Speed) Cruise Control on/off button is pushed.
- The ignition is turned OFF.

To Resume

If there is a set speed in memory push the RES (resume) button and then remove your foot from the accelerator pedal. The instrument cluster display will display the last set speed.

NOTE: ACC cannot be resumed if there is a stationary vehicle in-front of your vehicle in close proximity.

WARNING!

The Resume function should only be used if traffic and road conditions permit. Resuming a set speed that is too high or too low for prevailing traffic and road conditions could cause the vehicle to accelerate or decelerate too sharply for safe operation. Failure to follow these warnings can result in a collision and death or serious personal injury.

To Vary The ACC Speed

To Increase Speed

While ACC is set, you can increase the set speed by pushing the SET **(+)** button.

The driver's preferred units can be selected through the instrument panel settings if equipped. Refer to "Getting To Know Your Instrument Panel" for more information. The speed increment shown is dependant on the chosen speed unit of U.S. (mph) or Metric (km/h):

U.S. Speed (mph)

- Pushing the SET **(+)** button once will result in a 1 mph increase in set speed. Each subsequent tap of the button results in an increase of 1 mph.
- If the button is continually pushed, the set speed will continue to increase in 5 mph increments until the button is released. The increase in set speed is reflected in the instrument cluster display.

Metric Speed (km/h)

- Pushing the SET **(+)** button once will result in a 1 km/h increase in set speed. Each subsequent tap of the button results in an increase of 1 km/h.
- If the button is continually pushed, the set speed will continue to increase in 10 km/h increments until the button is released. The increase in set speed is reflected in the instrument cluster display.

To Decrease Speed

While ACC is set, the set speed can be decreased by pushing the SET **(-)** button.

The driver's preferred units can be selected through the instrument panel settings if equipped. Refer to "Getting To Know Your Instrument Panel" for more information. The speed decrement shown is dependant on the chosen speed unit of U.S. (mph) or Metric (km/h):

U.S. Speed (mph)

- Pushing the SET **(-)** button once will result in a 1 mph decrease in set speed. Each subsequent tap of the button results in a decrease of 1 mph.
- If the button is continually pushed, the set speed will continue to decrease in 5 mph decrements until the button is released. The decrease in set speed is reflected in the instrument cluster display.

Metric Speed (km/h)

- Pushing the SET **(-)** button once will result in a 1 km/h decrease in set speed. Each subsequent tap of the button results in a decrease of 1 km/h.
- If the button is continually pushed, the set speed will continue to decrease in 10 km/h decrements until the button is released. The decrease in set speed is reflected in the instrument cluster display.

NOTE:

- When you override and push the SET **(+)** button or SET **(-)** buttons, the new set speed will be the current speed of the vehicle.
- When you use the SET **(-)** button to decelerate, if the engine's braking power does not slow the vehicle sufficiently to reach the set speed, the brake system will automatically slow the vehicle.
- The ACC system decelerates the vehicle to a full stop when following a target vehicle. If an ACC host vehicle follows a target vehicle to a standstill, after two seconds the driver will either have to push the RES (resume) button, or apply the accelerator pedal to reengage the ACC to the existing set speed.
- The ACC will bring the vehicle to a complete stop while following a target vehicle and hold the vehicle for two seconds in the stop position. If the target vehicle does not start moving within two seconds, the ACC system will display a message that the system will release the brakes and that the brakes must be applied manually. An audible chime will sound when the brakes are released.
- The ACC system maintains set speed when driving up hill and down hill. However, a slight speed change on moderate hills is normal. In addition, downshifting may occur while climbing uphill or descending downhill. This is normal operation and necessary to maintain set speed. When driving up hill and down hill, the ACC system will cancel if the braking temperature exceeds normal range (overheated).

Setting The Following Distance In ACC

The specified following distance for ACC can be set by varying the distance setting between four bars (longest), three bars (long), two bars (medium) and one bar (short). Using this distance setting and the vehicle speed, ACC calculates and sets the distance to the vehicle ahead. This distance setting displays in the instrument cluster display.

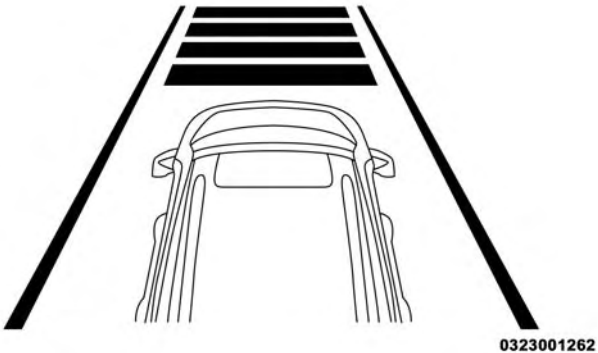

Distance Setting 4 Bars (Longest)

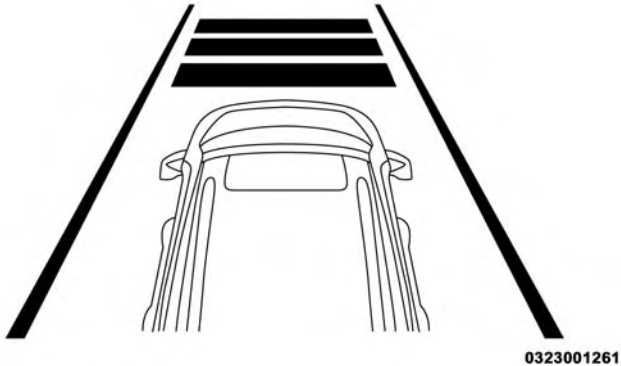

Distance Setting 3 Bars (Long)

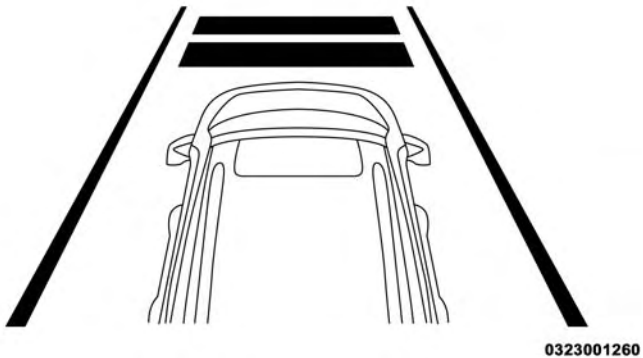

Distance Setting 2 Bars (Medium)

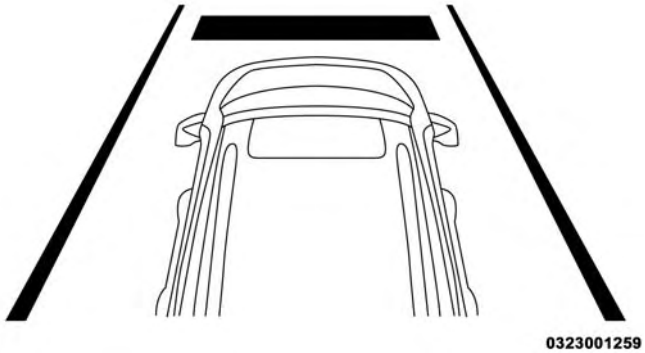

Distance Setting 1 Bar (Short)

To increase the distance setting, push the Distance Setting — Increase button and release. Each time the button is pushed, the distance setting increases by one bar (longer).

To decrease the distance setting, push the Distance Setting — Decrease button and release. Each time the button is pushed, the distance setting decreases by one bar (shorter).

If there is no vehicle ahead, the vehicle will maintain the set speed. If a slower moving vehicle is detected in the same lane, the instrument cluster displays the "Sensed Vehicle Indicator" icon, and the system adjusts vehicle speed automatically to maintain the distance setting, regardless of the set speed.

The vehicle will then maintain the set distance until:

- The vehicle ahead accelerates to a speed above the set speed.
- The vehicle ahead moves out of your lane or view of the sensor.
- The distance setting is changed.
- The system disengages. (Refer to the information on ACC Activation).

The maximum braking applied by ACC is limited; however, the driver can always apply the brakes manually, if necessary.

NOTE: The brake lights will illuminate whenever the ACC system applies the brakes.

A Proximity Warning will alert the driver if ACC predicts that its maximum braking level is not sufficient to maintain the set distance. If this occurs, a visual alert "BRAKE" will flash in the instrument cluster display and a chime will sound while ACC continues to apply its maximum braking capacity.

Brake Alert

NOTE: The "Brake!" Screen in the instrument cluster display is a warning for the driver to take action and does not necessarily mean that the Forward Collision Warning system is applying the brakes autonomously.

Overtake Aid

When driving with ACC engaged and following a vehicle, the system will provide an additional acceleration up to the ACC set speed to assist in passing the vehicle. This additional acceleration is triggered when the driver utilizes the left turn signal and will only be active when passing on the left hand side.

ACC Operation At Stop

If the ACC system brings your vehicle to a standstill while following a target vehicle, if the target vehicle starts moving within two seconds of your vehicle coming to a standstill, your vehicle will resume motion without the need for any driver action.

If the target vehicle does not start moving within two seconds of your vehicle coming to a standstill, the ACC with Stop system will cancel and the brakes will release. A cancel message will display on the instrument cluster display and produce a warning chime. Driver intervention will be required at this moment.

While ACC with Stop is holding your vehicle at a standstill, if the driver seatbelt is unbuckled or the driver door is opened, the ACC with Stop system will cancel and the brakes will release. A cancel message will display on the

instrument cluster display and produce a warning chime. Driver intervention will be required at this moment.

WARNING!

When the ACC system is resumed, the driver must ensure that there are no pedestrians, vehicles or objects in the path of the vehicle. Failure to follow these warnings can result in a collision and death or serious personal injury.

Adaptive Cruise Control (ACC) Menu

The instrument cluster display will show the current ACC system settings. The instrument cluster display is located in the center of the instrument cluster. The information it displays depends on ACC system status.

Push the Adaptive Cruise Control (ACC) on/off button (located on the steering wheel) until one of the following appears in the instrument cluster display:

Adaptive Cruise Control Off

When ACC is deactivated, the display will read "Adaptive Cruise Control Off."

Adaptive Cruise Control Ready

When ACC is activated, but the vehicle speed setting has not been selected, the display will read "Adaptive Cruise Control Ready."

Adaptive Cruise Control Set

When the SET (+) or the SET (-) button (located on the steering wheel) is pushed, the display will read "ACC SET."

When ACC is set, the set speed will show in the instrument cluster display.

The ACC screen may display once again if any ACC activity occurs, which may include any of the following:

- System Cancel
- Driver Override
- System Off
- ACC Proximity Warning
- ACC Unavailable Warning
- The instrument cluster display will return to the last display selected after five seconds of no ACC display activity

Display Warnings And Maintenance

"Wipe Front Radar Sensor In Front Of Vehicle" Warning

The "ACC/FCW Unavailable Wipe Front Radar Sensor" warning will display and also a chime will indicate when conditions temporarily limit system performance.

This most often occurs at times of poor visibility, such as in snow or heavy rain. The ACC system may also become temporarily blinded due to obstructions, such as mud, dirt or ice. In these cases, the instrument cluster display will display "ACC/FCW Unavailable Wipe Front Radar Sensor" and the system will deactivate.

The "ACC/FCW Unavailable Wipe Front Radar Sensor" message can sometimes be displayed while driving in highly reflective areas (i.e. tunnels with reflective tiles, or ice and snow). The ACC system will recover after the vehicle has left these areas. Under rare conditions, when the radar is not tracking any vehicles or objects in its path this warning may temporarily occur.

NOTE: If the "ACC/FCW Unavailable Wipe Front Radar Sensor" warning is active Normal (Fixed Speed) Cruise Control is still available. For additional information refer to "Normal (Fixed Speed) Cruise Control Mode" in this section.

If weather conditions are not a factor, the driver should examine the sensor. It may require cleaning or removal of an obstruction. The sensor is located in the center of the vehicle behind the lower grille.

To keep the ACC System operating properly, it is important to note the following maintenance items:

- Always keep the sensor clean. Carefully wipe the sensor lens with a soft cloth. Be cautious not to damage the sensor lens.
- Do not remove any screws from the sensor. Doing so could cause an ACC system malfunction or failure and require a sensor realignment.
- If the sensor or front end of the vehicle is damaged due to a collision, see your authorized dealer for service.

- Do not attach or install any accessories near the sensor, including transparent material or aftermarket grilles. Doing so could cause an ACC system failure or malfunction.

When the condition that deactivated the system is no longer present, the system will return to the "Adaptive Cruise Control Off" state and will resume function by simply reactivating it.

NOTE:

- If the "ACC/FCW Unavailable Wipe Front Radar Sensor" message occurs frequently (e.g. more than once on every trip) without any snow, rain, mud, or other obstruction, have the radar sensor realigned at your authorized dealer.
- Installing a snow plow, front-end protector, an aftermarket grille or modifying the grille is not recommended. Doing so may block the sensor and inhibit ACC/FCW operation.

"Clean Front Windshield" Warning

The "ACC/FCW Limited Functionality Clean Front Windshield" warning will display and also a chime will indicate when conditions temporarily limit system performance. This most often occurs at times of poor visibility, such as in snow or heavy rain and fog. The ACC system may also become temporarily blinded due to obstructions, such as mud, dirt, or ice on windshield and fog on the inside of glass. In these cases, the instrument cluster display will display "ACC/FCW Limited Functionality Clean Front Windshield" and the system will have degraded performance.

The "ACC/FCW Limited Functionality Clean Front Windshield" message can sometimes be displayed while driving in adverse weather conditions. The ACC/FCW system will recover after the vehicle has left these areas. Under rare conditions, when the camera is not tracking any vehicles or objects in its path this warning may temporarily occur.

If weather conditions are not a factor, the driver should examine the windshield and the camera located on the back side of the inside rear view mirror. They may require cleaning or removal of an obstruction.

When the condition that created limited functionality is no longer present, the system will return to full functionality.

NOTE: If the "ACC/FCW Limited Functionality Clean Front Windshield" message occurs frequently (e.g. more than once on every trip) without any snow, rain, mud, or other obstruction, have the windshield and forward facing camera inspected at your authorized dealer.

Service ACC/FCW Warning

If the system turns off, and the instrument cluster displays "ACC/FCW Unavailable Service Required" or "Cruise/FCW Unavailable Service Required", there may be an internal system fault or a temporary malfunction that limits ACC functionality. Although the vehicle is still drivable under normal conditions, ACC will be temporarily unavailable. If this occurs, try activating ACC again later, following an ignition cycle. If the problem persists, see your authorized dealer.

Precautions While Driving With ACC

In certain driving situations, ACC may have detection issues. In these cases, ACC may brake late or unexpectedly. The driver needs to stay alert and may need to intervene.

Towing A Trailer

Towing a trailer is not advised when using ACC.

Offset Driving

ACC may not detect a vehicle in the same lane that is offset from your direct line of travel, or a vehicle merging in from a side lane. There may not be sufficient distance to the vehicle ahead. The offset vehicle may move in and out of the line of travel, which can cause your vehicle to brake or accelerate unexpectedly.

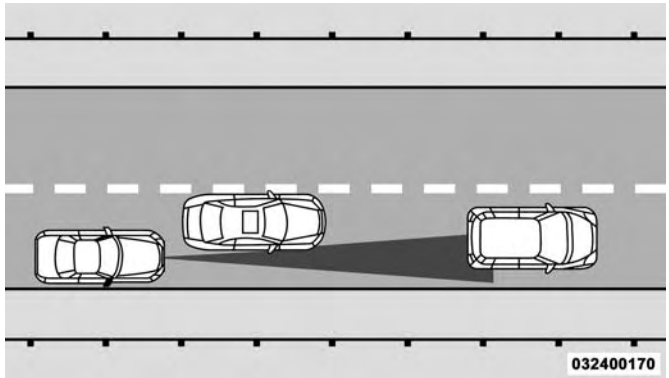

Offset Driving Condition Example

Turns And Bends

When driving on a curve with ACC engaged, the system may decrease the vehicle speed and acceleration for stability reasons, with no target vehicle detected. Once the vehicle is out of the curve the system will resume your original set speed. This is a part of normal ACC system functionality.

NOTE: On tight turns ACC performance may be limited.

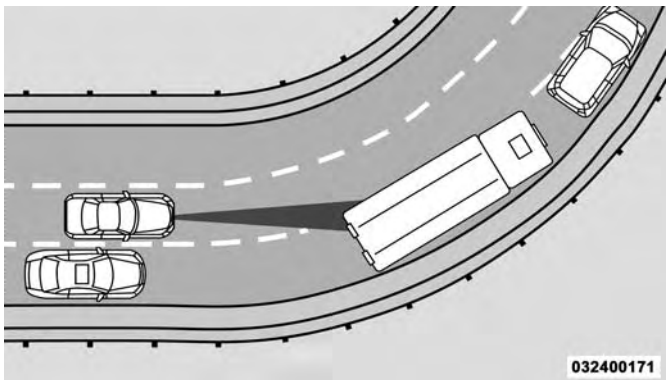

Turn Or Bend Example

Using ACC On Hills

When driving on hills, ACC may not detect a vehicle in your lane. Depending on the speed, vehicle load, traffic conditions, and the steepness of the hills, ACC performance may be limited.

ACC Hill Example

Lane Changing

ACC may not detect a vehicle until it is completely in the lane in which you are traveling. In the illustration shown, ACC has not yet detected the vehicle changing lanes and it may not detect the vehicle until it's too late for the ACC system to take action. ACC may not detect a vehicle until it is completely in the lane. There may not be sufficient distance to the lane-changing vehicle. Always be attentive and ready to apply the brakes if necessary.

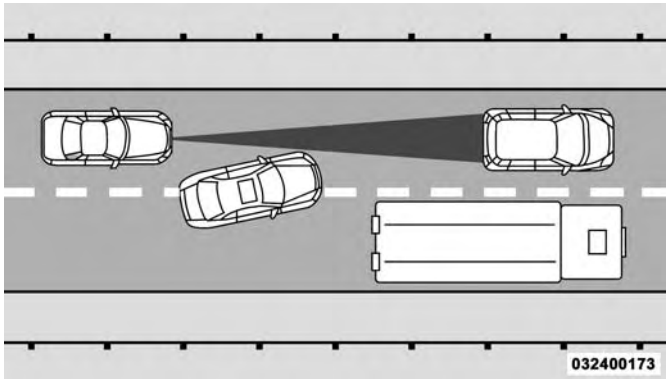

Lane Changing Example

Narrow Vehicles

Some narrow vehicles traveling near the outer edges of the lane or edging into the lane are not detected until they have moved fully into the lane. There may not be sufficient distance to the vehicle ahead.

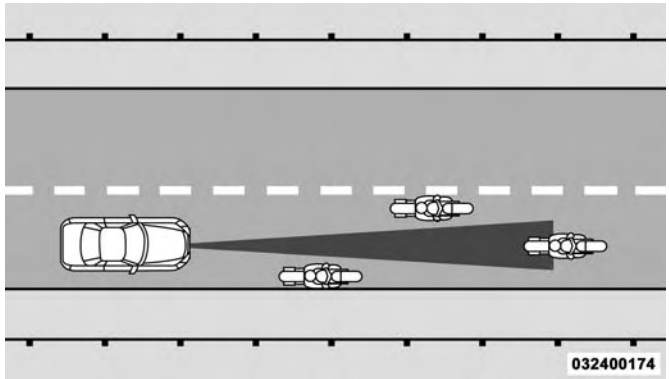

Narrow Vehicle Example

Stationary Objects And Vehicles

ACC does not react to stationary objects and stationary vehicles. For example, ACC will not react in situations where the vehicle you are following exits your lane and the vehicle ahead is stopped in your lane. Always be attentive and ready to apply the brakes if necessary.

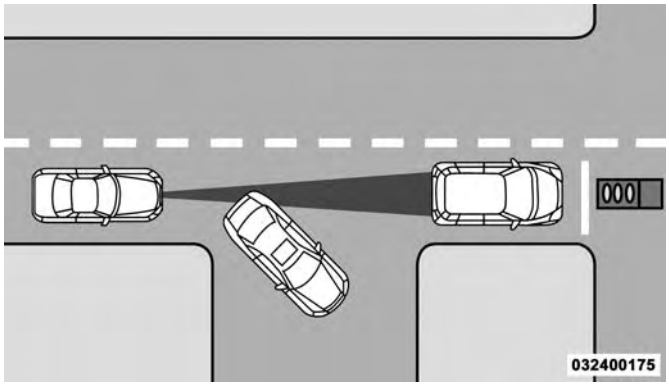

Stationary Object And Stationary Vehicle Example

General Information

The following regulatory statement applies to all Radio Frequency (RF) devices equipped in this vehicle:

This device complies with Part 15 of the FCC Rules and with Industry Canada license-exempt RSS standard(s). Operation is subject to the following two conditions:

1. This device may not cause harmful interference.
2. This device must accept any interference received, including interference that may cause undesired operation.

NOTE: Changes or modifications not expressly approved by the party responsible for compliance could void the user's authority to operate the equipment.

Normal (Fixed Speed) Cruise Control Mode

In addition to Adaptive Cruise Control mode, a Normal (Fixed Speed) Cruise Control mode is available for cruising at fixed speeds. The Normal (Fixed Speed) Cruise Control mode is designed to maintain a set cruising speed without requiring the driver to operate the accelerator. Cruise Control can only be operated if the vehicle speed is above 20 mph (32 km/h).

To change between the different control modes, push the Adaptive Cruise Control (ACC) on/off button which turns the ACC and the Normal (Fixed Speed) Cruise Control off. Pushing the Normal (Fixed Speed) Cruise Control on/off button will result in turning on (changing to) the Normal (Fixed Speed) Cruise Control mode.

WARNING!

In the Normal (Fixed Speed) Cruise Control mode, the system will not react to vehicles ahead. In addition, the proximity warning does not activate and no alarm will sound even if you are too close to the vehicle ahead since neither the presence of the vehicle ahead nor the vehicle-to-vehicle distance is detected. Be sure to maintain a safe distance between your vehicle and the vehicle ahead. Always be aware which mode is selected.

To Set A Desired Speed

Turn the Normal (Fixed Speed) Cruise Control on. When the vehicle has reached the desired speed, push the SET (+) or SET (-) button and release. Release the accelerator and the vehicle will operate at the selected speed. Once a speed has been set a message "CRUISE CONTROL SET TO MPH (km/h)" will appear indicating what speed was set. This light will turn on when the system is turned on via the on/off control. It turns green when the cruise control is set.

To Vary The Speed Setting

To Increase Speed

When the Normal (Fixed Speed) Cruise Control is set, you can increase speed by pushing the SET **(+)** button.

The driver's preferred units can be selected through the instrument cluster display. Refer to "Getting To Know Your Instrument Panel" for more information. The speed increment shown is dependant on the speed of U.S. (mph) or Metric (km/h) units:

U.S. Speed (mph)

- Pushing the SET **(+)** button once will result in a 1 mph increase in set speed. Each subsequent tap of the button results in an increase of 1 mph.
- If the button is continually pushed, the set speed will continue to increase in 5 mph increments until the button is released. The increase in set speed is reflected in the instrument cluster display.

Metric Speed (km/h)

- Pushing the SET **(+)** button once will result in a 1 km/h increase in set speed. Each subsequent tap of the button results in an increase of 1 km/h.
- If the button is continually pushed, the set speed will continue to increase in 10 km/h increments until the button is released. The increase in set speed is reflected in the instrument cluster display.

To Decrease Speed

When the Normal (Fixed Speed) Cruise Control is set, you can decrease speed by pushing the SET **(-)** button.

The driver's preferred units can be selected through the instrument cluster display. Refer to "Getting To Know Your Instrument Panel" for more information. The speed decrement shown is dependant on the speed of U.S. (mph) or Metric (km/h) units:

U.S. Speed (mph)

- Pushing the SET **(-)** button once will result in a 1 mph decrease in set speed. Each subsequent tap of the button results in a decrease of 1 mph.
- If the button is continually pushed, the set speed will continue to decrease in 5 mph decrements until the button is released. The decrease in set speed is reflected in the instrument cluster display.

Metric Speed (km/h)

- Pushing the SET **(-)** button once will result in a 1 km/h decrease in set speed. Each subsequent tap of the button results in a decrease of 1 km/h.
- If the button is continually pushed, the set speed will continue to decrease in 10 km/h decrements until the button is released. The decrease in set speed is reflected in the instrument cluster display.

To Cancel

The following conditions will cancel the Normal (Fixed Speed) Cruise Control without clearing the memory:

- The brake pedal is applied.
- The CANC button is pushed.
- The Electronic Stability Control/Traction Control System (ESC/TCS) activates.

- The vehicle parking brake is applied.
- The braking temperature exceeds normal range (overheated).
- The gear selector is removed from the DRIVE position.

To Resume Speed

To resume a previously set speed, push the RES button and release. Resume can be used at any speed above 20 mph (32 km/h).

To Turn Off

The system will turn off and erase the set speed in memory if:

- The Normal (Fixed Speed) Cruise Control on/off button is pushed.
- The ignition is turned OFF.
- The Adaptive Cruise Control (ACC) on/off button is pushed.

PARKSENSE FRONT AND REAR PARK ASSIST — IF EQUIPPED

The ParkSense Park Assist system provides visual and audible indications of the distance between the rear and/or front fascia and a detected obstacle when backing up or moving forward, e.g. during a parking maneuver.

Refer to "ParkSense System Usage Precautions" in this section for limitations of this system and recommendations.

ParkSense will retain the last system state (enabled or disabled) from the last ignition cycle when the ignition is changed to the ON/RUN position.

ParkSense can be active only when the gear selector is in REVERSE or DRIVE. If ParkSense is enabled at one of these gear selector positions, the system will remain active until the vehicle speed is increased to approximately 7 mph (11 km/h) or above. The system will become active again if the vehicle speed is decreased to speeds less than approximately 6 mph (9 km/h).

ParkSense Sensors

The four ParkSense sensors, located in the rear fascia/bumper, monitor the area behind the vehicle that is within the sensors' field of view. The sensors can detect obstacles from approximately 12 inches (30 cm) up to 79 inches (200 cm) from the rear fascia/bumper in the horizontal direction, depending on the location, type and orientation of the obstacle.

The six ParkSense sensors, located in the front fascia/bumper, monitor the area in front of the vehicle that is within the sensors' field of view. The sensors can detect obstacles from approximately 12 inches (30 cm) up to 47 inches (120 cm) from the front fascia/bumper in the horizontal direction, depending on the location, type and orientation of the obstacle.

ParkSense Warning Display

The ParkSense Warning screen will only be displayed if Sound and Display is selected from the Customer Programmable Features section of the Uconnect System. Refer to "Uconnect Settings" in "Multimedia" for further information.

The ParkSense Warning screen is located within the instrument cluster display. It provides visual warnings to indicate the distance between the rear fascia/bumper and/or front fascia/bumper and the detected obstacle. Refer to "Instrument Cluster Display" in "Getting To Know Your Instrument Panel" for further information.

ParkSense Display

Rear Park Assist

While the vehicle is in REVERSE, the ParkSense Display is shown in the instrument cluster.

The system will indicate a detected obstacle by showing a single arc in one or more regions based on the obstacle's distance and location relative to the vehicle.

If an obstacle is detected in the center rear region, the display will show a single solid arc in the center rear region and will produce a one-half second tone. As the vehicle moves closer to the obstacle, the display will show the single arc moving closer to the vehicle and the sound tone will change from slow, to fast, to continuous.

If an obstacle is detected in the left and/or right rear region, the display will show a single flashing arc in the left and/or right rear region and will produce a fast sound tone. As the vehicle moves closer to the obstacle, the display will show the single arc moving closer to the vehicle and the tone will change from fast to continuous.

0329058578

Single 1/2 Second Tone/Solid Arc

0329058579

Slow Tone/Solid Arc

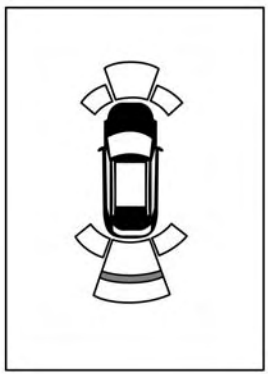

0329058580

Slow Tone/Solid Arc

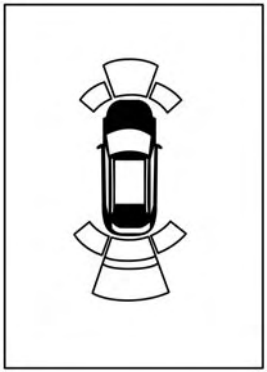

0329053488

Fast Tone/Flashing Arc

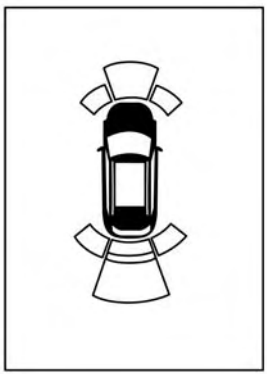

0329053465

Fast Tone/Flashing Arc

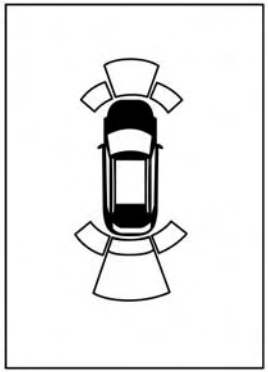

0329053466

Continuous Tone/Flashing Arc

The vehicle is close to the obstacle when the warning display shows one flashing arc and sounds a continuous tone. The following chart shows the warning alert operation when the system is detecting an obstacle:

WARNING ALERTS							
Rear Distance (inches/cm)	Greater than 79 inches (200 cm)	79-59 inches (200-150 cm)	59-47 inches (150-120 cm)	47-39 inches (120-100 cm)	39-25 inches (100-65 cm)	25-12 inches (65-30 cm)	Less than 12 inches (30 cm)
Arcs — Left	None	None	None	None	None	2nd Flashing	1st Flashing
Arcs — Center	None	6th Solid	5th Solid	4th Solid	3rd Flashing	2nd Flashing	1st Flashing
Arcs — Right	None	None	None	None	None	2nd Flashing	1st Flashing
Audible Alert Chime	None	Single 1/2-Second Tone (for rear center only)	Slow (for rear center only)	Slow (for rear center only)	Fast (for rear center only)	Fast	Continuous
Radio Volume Reduced	No	Yes	Yes	Yes	Yes	Yes	Yes

NOTE: ParkSense will reduce the volume of the radio, if on, when the system is sounding an audio tone.

Front Park Assist

When the vehicle is in DRIVE the ParkSense Warning screen will be displayed when an obstacle is detected.

The system will indicate a detected obstacle by showing a single arc in one or more regions based on the obstacle's distance and location relative to the vehicle.

If an obstacle is detected in the center front region, the display will show a single arc in the center front region. As the vehicle moves closer to the obstacle, the display will show the single arc moving closer to the vehicle. A fast sound tone will be produced when reaching the second flashing arc and will change to a continuous sound tone when the first flashing arc appears.

If an obstacle is detected in the left and/or right front region, the display will show a single flashing arc in the left and/or right front region and will produce a fast sound tone. As the vehicle moves closer to the obstacle, the display will show the single arc moving closer to the vehicle and the tone will change from fast to continuous.

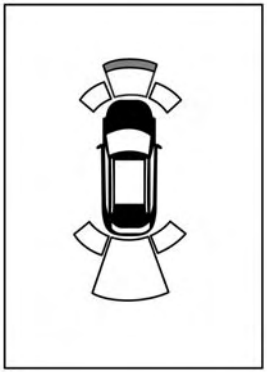

0329058581

No Tone/Solid Arc

0329053469

Fast Tone/Flashing Arc

0329053470

Continuous Tone/Flashing Arc

The vehicle is close to the obstacle when the warning display shows one flashing arc and sounds a continuous tone. The following chart shows the warning alert operation when the system is detecting an obstacle:

WARNING ALERTS					
Front Distance (inches/cm)	Greater than 47 inches (120 cm)	47-39 inches (120-100 cm)	39-25 inches (100-65 cm)	25-12 inches (65-30 cm)	Less than 12 inches (30 cm)
Arcs — Left	None	None	None	2nd Flashing	1st Flashing
Arcs — Center	None	4th Solid	3rd Flashing	2nd Flashing	1st Flashing
Arcs — Right	None	None	None	2nd Flashing	1st Flashing
Audible Alert Chime	None	None	None	Fast	Continuous
Radio Volume Reduced	No	No	No	Yes	Yes

NOTE: ParkSense will reduce the volume of the radio, if on, when the system is sounding an audio tone.

Front Park Assist Audible Alerts

ParkSense will turn off the Front Park Assist audible alert (chime) after approximately three seconds when an obstacle has been detected, the vehicle is stationary, and brake pedal is applied.

Adjustable Chime Volume Settings

Front and Rear chime volume settings can be selected from the Customer-Programmable Features section of the Uconnect System, refer to “Uconnect Settings” in “Multimedia” for further information.

If the Uconnect System is equipped, chime volume settings will not be accessible from the instrument cluster display.

The chime volume settings include low, medium, and high. The factory default volume setting is medium.

ParkSense will retain its last known configuration state through ignition cycles.

Enabling And Disabling ParkSense

ParkSense can be enabled and disabled with the ParkSense switch, located on the switch panel below the Uconnect display.

When the ParkSense switch is pushed to disable the system, the instrument cluster will display the “PARKSENSE OFF” message for approximately five seconds. Refer to “Instrument Cluster Display” in “Getting To Know Your Instrument Panel” for further information. When the gear selector is moved to REVERSE and the system is disabled, the instrument cluster display will show the “PARKSENSE OFF” message for as long as the vehicle is in REVERSE.

The ParkSense switch LED will be on when ParkSense is disabled or requires service. The ParkSense switch LED will be off when the system is enabled. If the ParkSense switch is pushed, and requires service, the ParkSense switch LED will blink momentarily, and then the LED will be on.

Service The ParkSense Park Assist System

During vehicle start up, when the ParkSense System has detected a faulted condition, the instrument cluster will actuate a single chime, once per ignition cycle, and it will display the ″PARKSENSE UNAVAILABLE WIPE REAR SENSORS″, ″PARKSENSE UNAVAILABLE WIPE FRONT SENSORS″, or the ″PARKSENSE UNAVAILABLE SERVICE REQUIRED″ message for five seconds. When the gear selector is moved to REVERSE and the system has detected a faulted condition, the instrument cluster display will display a ″PARKSENSE UNAVAILABLE WIPE REAR SENSORS″, ″PARKSENSE UNAVAILABLE WIPE FRONT SENSORS″ or ″PARKSENSE UNAVAILABLE SERVICE REQUIRED″ pop up message for five seconds. After five seconds, a vehicle graphic will be displayed with ″UNAVAILABLE″ at either the front or rear sensor location depending on where the fault is detected. The system will continue to provide arc alerts for the side that is functioning properly. These arc alerts will interrupt the ″PARKSENSE UNAVAILABLE WIPE REAR SENSORS″, ″PARKSENSE UNAVAILABLE WIPE FRONT SENSORS″, or ″PARKSENSE UNAVAILABLE SERVICE REQUIRED″ messages if an object is detected within the five second pop-up duration. The vehicle graphic will remain displayed for as long as the vehicle is in REVERSE.

Refer to “Instrument Cluster Display” in “Getting To Know Your Instrument Panel” for further information.

If ″PARKSENSE UNAVAILABLE WIPE REAR SENSORS″ or ″PARKSENSE UNAVAILABLE WIPE FRONT SENSORS″ appears in the instrument cluster display make sure the outer surface and the underside of the rear fascia/bumper and/or front fascia/bumper is clean and clear of snow, ice, mud, dirt or other obstruction and then cycle the ignition. If the message continues to appear see your authorized dealer.

If the ″PARKSENSE UNAVAILABLE SERVICE REQUIRED″ message appears in the instrument cluster display, see your authorized dealer.

Cleaning The ParkSense System

Clean the ParkSense sensors with water, car wash soap and a soft cloth. Do not use rough or hard cloths. Do not scratch or poke the sensors. Otherwise, you could damage the sensors.

ParkSense System Usage Precautions

NOTE:

- Ensure that the front and rear bumper are free of snow, ice, mud, dirt and debris to keep the ParkSense system operating properly.
- Jackhammers, large trucks, and other vibrations could affect the performance of ParkSense.
- When you turn ParkSense off, the instrument cluster will display “PARKSENSE OFF.” Furthermore, once you turn ParkSense off, it remains off until you turn it on again, even if you cycle the ignition.
- When you move the gear selector to the REVERSE position and ParkSense is turned off, the instrument cluster will display “PARKSENSE OFF” for as long as the vehicle is in REVERSE.
- ParkSense, when on, will reduce the volume of the radio when it is sounding a tone.

- Clean the ParkSense sensors regularly, taking care not to scratch or damage them. The sensors must not be covered with ice, snow, slush, mud, dirt or debris. Failure to do so can result in the system not working properly. The ParkSense system might not detect an obstacle behind or in front of the fascia/bumper, or it could provide a false indication that an obstacle is behind or in front of the fascia/bumper.
- Use the ParkSense switch to turn the ParkSense system off if objects such as bicycle carriers, trailer hitches, etc. are placed within 12 inches (30 cm) from the rear fascia/bumper. Failure to do so can result in the system misinterpreting a close object as a sensor problem, causing the "PARKSENSE UNAVAILABLE SERVICE REQUIRED" message to be displayed in the instrument cluster.

WARNING!

- **Drivers must be careful when backing up even when using ParkSense. Always check carefully behind your vehicle, look behind you, and be sure to check for pedestrians, animals, other vehicles, obstructions, and blind spots before backing up. You are responsible for safety and must continue to pay attention to your surroundings. Failure to do so can result in serious injury or death.**
- **Before using ParkSense, it is strongly recommended that the ball mount and hitch ball assembly is disconnected from the vehicle when the vehicle is not used for towing. Failure to do so can result in injury or damage to vehicles or obstacles because the hitch ball will be much closer to the obstacle than the rear fascia when the loudspeaker sounds the continuous tone. Also, the sensors could detect the ball mount and hitch ball assembly, depending on its size and shape, giving a false indication that an obstacle is behind the vehicle.**

CAUTION!

- **ParkSense is only a parking aid and it is unable to recognize every obstacle, including small obstacles. Parking curbs might be temporarily detected or not detected at all. Obstacles located above or below the sensors will not be detected when they are in close proximity.**
- **The vehicle must be driven slowly when using ParkSense in order to be able to stop in time when an obstacle is detected. It is recommended that the driver looks over his/her shoulder when using ParkSense.**

LANESENSE — IF EQUIPPED

LaneSense Operation

The LaneSense system is operational at speeds above 37 mph (60 km/h) and below 112 mph (180 km/h). The LaneSense system uses a forward looking camera to detect lane markings and measure vehicle position within the lane boundaries.

When both lane markings are detected and the driver unintentionally drifts out of the lane (no turn signal applied), the LaneSense system provides a haptic warning in the form of torque applied to the steering wheel to prompt the driver to remain within the lane boundaries. If the driver continues to unintentionally drift out of the lane, the LaneSense system provides a visual warning through the instrument cluster display to prompt the driver to remain within the lane boundaries.

The driver may manually override the haptic warning by applying torque into the steering wheel at any time.

When only a single lane marking is detected and the driver unintentionally drifts across the lane marking (no turn signal applied), the LaneSense system provides visual warnings through the instrument cluster display to prompt the driver to remain within the lane. When only a single lane marking is detected, a haptic (torque) warning will not be provided.

NOTE: When operating conditions have been met, the LaneSense system will monitor if the driver's hands are on the steering wheel and provides an audible warning to the driver when the driver's hands are not detected on the steering wheel. The system will cancel if the driver does not return their hands to the wheel.

Turning LaneSense On Or Off

The default status of LaneSense is off.

The LaneSense button is located on the center stack below the Uconnect display.

To turn the LaneSense system on, push the LaneSense button (LED turns off). A "LaneSense On" message is shown in the instrument cluster display.

To turn the LaneSense system off, push the LaneSense button once (LED turns on).

NOTE: The LaneSense system will retain the last system state, on or off, from the last ignition cycle when the ignition is changed to the ON/RUN position.

LaneSense Warning Message

The LaneSense system will indicate the current lane drift condition through the instrument cluster display.

Premium Instrument Cluster Display Screen — If Equipped

When the LaneSense system is on; the lane lines are gray when both of the lane boundaries have not been detected and the LaneSense telltale is solid white.

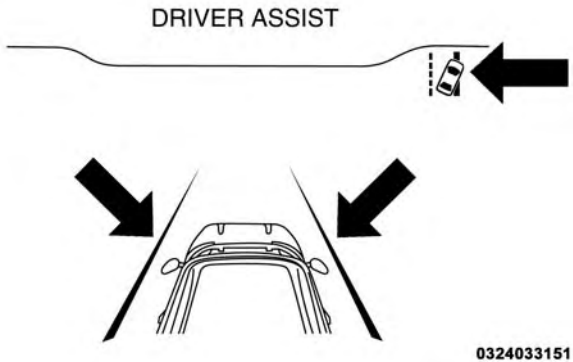

System On (Gray Lines/White Telltale)

Left Lane Departure — Only Left Lane Detected

- When the LaneSense system is on, the LaneSense telltale is solid white when only the left lane marking has been detected and the system is ready to provide visual warnings in the instrument cluster display if an unintentional lane departure occurs.
- When the LaneSense system senses the lane has been approached and is in a lane departure situation, the left thick lane line flashes yellow (on/off), the left thin line remains solid yellow and the LaneSense telltale changes from solid white to flashing yellow.

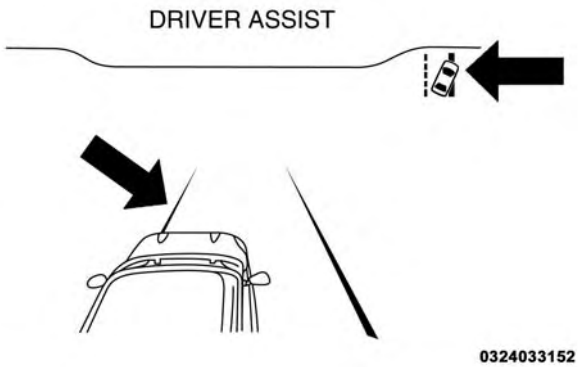

Lane Approached (Flashing Yellow Thick Line, Solid Yellow Thin Line/Flashing Yellow Telltale)

NOTE: The LaneSense system operates with the similar behavior for a right lane departure when only the right lane marking has been detected.

Left Lane Departure — Both Lanes Detected

- When the LaneSense system is on, the lane lines turn from gray to white to indicate that both of the lane markings have been detected. The LaneSense telltale is solid green when both lane markings have been detected and the system is "armed" to provide visual warnings in the instrument cluster display and a torque warning in the steering wheel if an unintentional lane departure occurs.

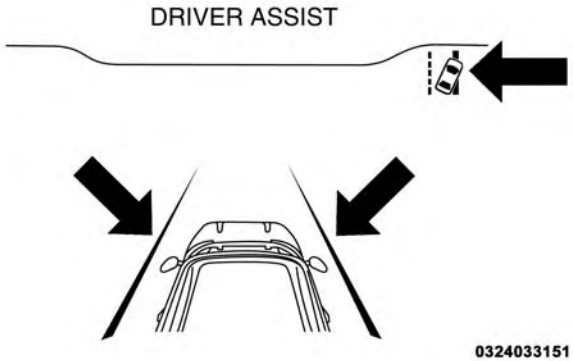

Lanes Sensed (White Lines/Green Telltale)

- When the LaneSense system senses a lane drift situation, the left thick lane line and left thin line turn solid yellow. The LaneSense telltale changes from solid green to solid yellow. At this time torque is applied to the steering wheel in the opposite direction of the lane boundary.

- For example, if approaching the left side of the lane the steering wheel will turn to the right.

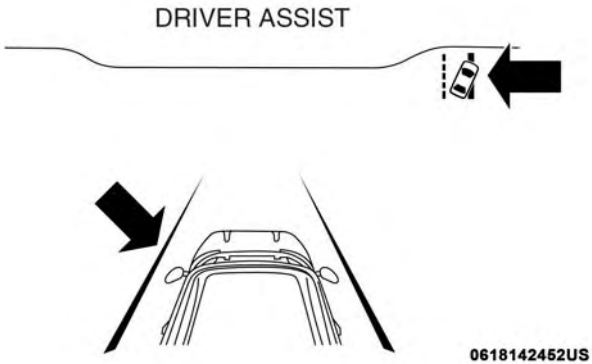

Lane Sensed (Solid Yellow Lines/Solid Yellow Telltale)

- When the LaneSense system senses the lane has been approached and is in a lane departure situation, the left thick lane line flashes yellow (on/off) and the left thin line remains solid yellow. The LaneSense telltale changes from solid yellow to flashing yellow. At this time torque is applied to the steering wheel in the opposite direction of the lane boundary.
- For example, if approaching the left side of the lane the steering wheel will turn to the right.

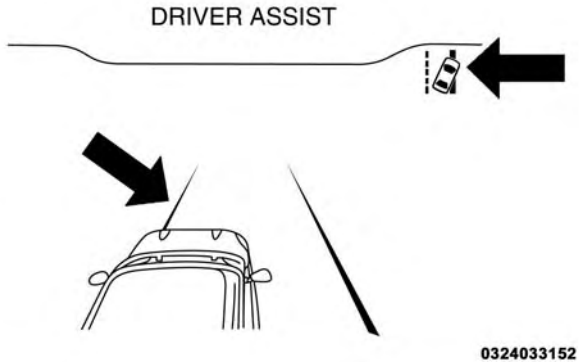

Lane Approached (Flashing Yellow Thick Line, Solid Yellow Thin Line/Flashing Yellow Telltale)

NOTE: The LaneSense system operates with the similar behavior for a right lane departure.

Changing LaneSense Status

The LaneSense system settings can be configured through the Uconnect system screen.

Follow these steps to change the LaneSense settings:

1. Press the “Controls” button located on the bottom of the Uconnect touchscreen display.
2. Press the “Settings” button.
3. Press the “Safety & Driving Assistance” button.

When in the Safety & Driving Assistance screen, you can configure the intensity of the torque warning and the warning zone sensitivity (early/late) through the personalization settings.

NOTE:

- When enabled the system operates above 37 mph (60 km/h) and below 112 mph (180 km/h).
- Use of the turn signal suppresses the warnings.
- The system will not apply torque to the steering wheel whenever a safety system engages. (anti-lock brakes, traction control system, electronic stability control, forward collision warning, etc.)

PARKVIEW REAR BACK UP CAMERA

Your vehicle is equipped with the ParkView Rear Back Up Camera that allows you to see an on-screen image of the rear surroundings of your vehicle whenever the gear selector is put into REVERSE. The ParkView camera is located on the rear of the vehicle above the rear license plate. The image will be displayed in the touchscreen display along with a caution note to “check entire surroundings” across the top of the screen. After five seconds, this note will disappear.

Manual Activation Of The Rear View Camera:

1. Press the ″Controls″ button located on the bottom of the Uconnect display.
2. Press the ″Backup Camera″ button to turn the Rear View Camera system on.

NOTE: The ParkView Rear Back Up Camera has programmable modes of operation that may be selected through the Uconnect System. Refer to “Uconnect Settings” in “Multimedia” for further information.

If your vehicle is equipped with the Camera Delay feature and it is turned on, the rear camera image will be displayed for up to 10 seconds when the vehicle is shifted out of REVERSE. However, this feature is canceled if the forward vehicle speed exceeds 8 mph (13 km/h), the transmission is shifted into PARK, the vehicle’s ignition is cycled to OFF, or by pressing the image defeat [X] button.

When the vehicle is shifted out of REVERSE (with Camera Delay turned off), the rear camera mode is exited and the last touchscreen appears again.

When enabled, active guide lines are overlaid on the image to illustrate the width of the vehicle and its projected backup path based on the steering wheel position. The active guide lines will show separate zones that will help indicate the distance to the rear of the vehicle.

When manually activated, a counter will be initiated after the vehicle speed is above 8 mph (13 km/h). The rear view camera image will turn off when this counter reaches 10 seconds. The counter will be reset when the vehicle speed is 8 mph (13 km/h) or below.

If the vehicle speed remains below 8 mph (13 km/h), the rear view camera image will continue to be displayed until the transmission is shifted into PARK, the vehicle's ignition is cycled to the OFF position, or the image defeat [X] button is pressed.

Different colored zones indicate the distance to the rear of the vehicle.

The following table shows the approximate distances for each zone:

Zone	Distance To The Rear Of The Vehicle
Red	0 - 1 ft (0 - 30 cm)
Yellow	1 ft - 6.5 ft (30 cm - 2 m)
Green	6.5 ft or greater (2 m or greater)

WARNING!

Drivers must be careful when backing up even when using the ParkView Rear Back Up Camera. Always check carefully behind your vehicle, and be sure to check for pedestrians, animals, other vehicles, obstructions, or blind spots before backing up. You are responsible for the safety of your surroundings and must continue to pay attention while backing up. Failure to do so can result in serious injury or death.

CAUTION!

- **To avoid vehicle damage, ParkView should only be used as a parking aid. The ParkView camera is unable to view every obstacle or object in your drive path.**
- **To avoid vehicle damage, the vehicle must be driven slowly when using ParkView to be able to stop in time when an obstacle is seen. It is recommended that the driver look frequently over his/her shoulder when using ParkView.**

NOTE: If snow, ice, mud, or any foreign substance builds up on the camera lens, clean the lens, rinse with water, and dry with a soft cloth. Do not cover the lens.

REFUELING THE VEHICLE

1. Push the fuel filler door release switch (located in the driver's door map pocket).

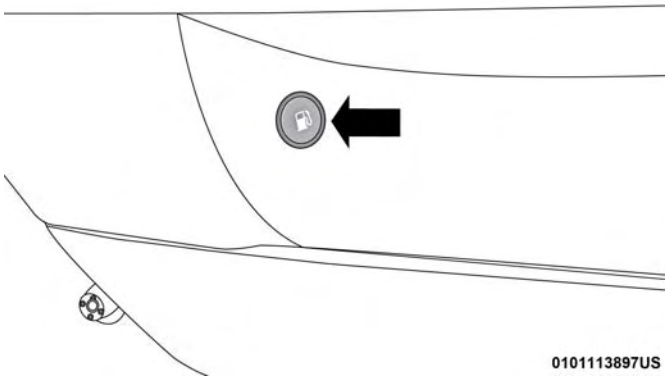

Fuel Filler Door Release Switch

2. Open the fuel filler door.

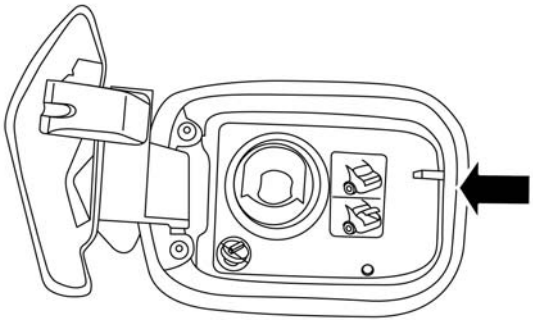

Fuel Filler Door

NOTE: In certain cold conditions, ice may prevent the fuel door from opening. If this occurs, lightly push on the fuel door to break the ice buildup and re-release the fuel door using the inside release button. Do not pry on the door.

3. There is no fuel filler cap. A flapper door inside the pipe seals the system.
4. Insert the fuel nozzle fully into the filler pipe – the nozzle opens and holds the flapper door while refueling.

NOTE: Only the correct size nozzle opens the latches allowing the flapper door to open.

5. Fill the vehicle with fuel – when the fuel nozzle “clicks” or shuts off the fuel tank is full.
6. Maintain nozzle in filler for 5 seconds to allow nozzle to drain.
7. Remove the fuel nozzle and close the fuel door.

NOTE: A funnel is provided (located in the trunk in the spare tire area) to open the flapper door to allow for emergency refueling with a gas can.

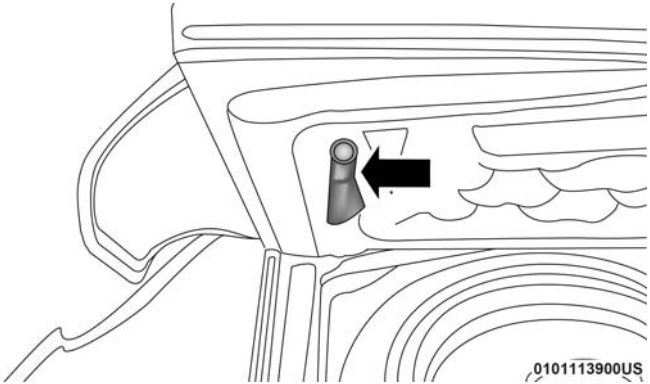

Fuel Funnel

WARNING!

- **Never have any smoking materials lit in or near the vehicle when the fuel door is open or the tank is being filled.**
- **Never add fuel when the engine is running. This is in violation of most state and federal fire regulations and may cause the "Malfunction Indicator Light" to turn on.**

(Continued)

WARNING! ***(Continued)***

- **A fire may result if fuel is pumped into a portable container that is inside of a vehicle. You could be burned. Always place fuel containers on the ground while filling.**

CAUTION!

To avoid fuel spillage and overfilling, do not "top off" the fuel tank after filling.

Emergency Fuel Filler Door Release

If you are unable to open the fuel filler door, use the fuel filler door emergency release located in the trunk.

Follow the steps below to open the fuel door in case of an emergency:

1. Open the trunk.

2. Remove the access cover (located on the left side inner trim panel).

0101113894US

Access Cover

3. Pull the release cable.

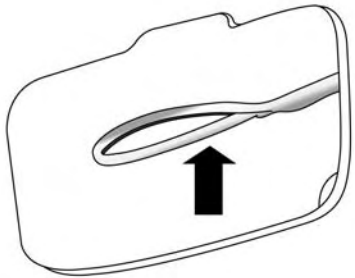

0101113907US

Release Cable

VEHICLE LOADING

The load carrying capacity of your vehicle is shown on the "Vehicle Certification Label". This information should be used for passenger and luggage loading as indicated.

Do not exceed the specified Gross Vehicle Weight Rating (GVWR) or the Gross Axle Weight Rating (GAWR).

Vehicle Certification Label

Your vehicle has a Vehicle Certification Label affixed to the drivers side B-Pillar or the rear of the driver's door.

The label contains the following information:

- Name of manufacturer
- Month and year of manufacture
- Gross Vehicle Weight Rating (GVWR)
- Gross Axle Weight Rating (GAWR) front
- Gross Axle Weight Rating (GAWR) rear
- Vehicle Identification Number (VIN)
- Type of vehicle
- Month, Day, and Hour of manufacture (MDH)

The bar code allows a computer scanner to read the VIN.

Gross Vehicle Weight Rating (GVWR)

The GVWR is the total allowable weight of your vehicle. This includes driver, passengers, and cargo. The total load must be limited so that you do not exceed the GVWR.

Gross Axle Weight Rating (GAWR)

The GAWR is the maximum capacity of the front and rear axles. Distribute the load over the front and rear axles evenly. Make sure that you do not exceed either front or rear GAWR.

WARNING!

Because the front wheels steer the vehicle, it is important that you do not exceed the maximum front or rear GAWR. A dangerous driving condition can result if either rating is exceeded. You could lose control of the vehicle and have a collision.

Overloading

The load carrying components (axle, springs, tires, wheels, etc.) of your vehicle will provide satisfactory service as long as you do not exceed the GVWR and the front and rear GAWR.

The best way to figure out the total weight of your vehicle is to weigh it when it is fully loaded and ready for operation. Weigh it on a commercial scale to ensure that it is not over the GVWR.

Figure out the weight on the front and rear of the vehicle separately. It is important that you distribute the load evenly over the front and rear axles.

Overloading can cause potential safety hazards and shorten useful service life. Heavier axles or suspension components do not necessarily increase the vehicle's GVWR.

Loading

To load your vehicle properly, first figure out its empty weight, axle-by-axle and side-by-side. Store heavier items down low and be sure you distribute their weight as evenly as possible. Stow all loose items securely before driving. If weighing the loaded vehicle shows that you have exceeded either GAWR, but the total load is within the specified GVWR, you must redistribute the weight. Improper weight distribution can have an adverse effect on the way your vehicle steers and handles and the way the brakes operate.

NOTE:

- Refer to the "Vehicle Certification Label" affixed to the rear of the driver's door for your vehicle's GVWR and GAWRs.
- Refer to the "Tire Placard" for your vehicle's proper tire pressure.

TRAILER TOWING

In this section you will find safety tips and information on limits to the type of towing you can reasonably do with your vehicle. Before towing a trailer, carefully review this information to tow your load as efficiently and safely as possible.

To maintain the New Vehicle Limited Warranty coverage, follow the requirements and recommendations in this manual concerning vehicles used for trailer towing.

Common Towing Definitions

The following trailer towing related definitions will assist you in understanding the following information:

Gross Vehicle Weight Rating (GVWR)

The GVWR is the total allowable weight of your vehicle. This includes driver, passengers, cargo and tongue weight.

The total load must be limited so that you do not exceed the GVWR. Refer to "Vehicle Loading/Vehicle Certification Label" in "Starting And Operating" for further information.

Gross Trailer Weight (GTW)

The GTW is the weight of the trailer plus the weight of all cargo, consumables, and equipment (permanent or temporary) loaded in or on the trailer in its "loaded and ready for operation" condition.

The recommended way to measure GTW is to put your fully loaded trailer on a vehicle scale. The entire weight of the trailer must be supported by the scale.

Gross Combination Weight Rating (GCWR)

The GCWR is the total allowable weight of your vehicle and trailer when weighed in combination.

Gross Axle Weight Rating (GAWR)

The GAWR is the maximum capacity of the front and rear axles. Distribute the load over the front and rear axles evenly. Make sure that you do not exceed either front or rear GAWR. Refer to "Vehicle Loading/Vehicle Certification Label" in "Starting And Operating" for further information.

WARNING!

It is important that you do not exceed the maximum front or rear GAWR. A dangerous driving condition can result if either rating is exceeded. You could lose control of the vehicle and have a collision.

Tongue Weight (TW)

The tongue weight is the downward force exerted on the hitch ball by the trailer. You must consider this as part of the load on your vehicle.

Trailer Frontal Area

The frontal area is the maximum height multiplied by the maximum width of the front of a trailer.

Trailer Sway Control

The trailer sway control can be a mechanical telescoping link that can be installed between the hitch receiver and the trailer tongue that typically provides adjustable friction associated with the telescoping motion to dampen any unwanted trailer swaying motions while traveling.

If equipped, the electronic Trailer Sway Control (TSC) recognizes a swaying trailer and automatically applies individual wheel brakes and/or reduces engine power to attempt to eliminate the trailer sway.

Weight-Carrying Hitch

A weight-carrying hitch supports the trailer tongue weight, just as if it were luggage located at a hitch ball or some other connecting point of the vehicle. These kinds of hitches are the most popular on the market today and they are commonly used to tow small and medium sized trailers.

Weight-Distributing Hitch

A weight-distributing system works by applying leverage through spring (load) bars. They are typically used for heavier loads to distribute trailer tongue weight to the tow vehicle's front axle and the trailer axle(s). When used in accordance with the manufacturer's directions, it provides for a more level ride, offering more consistent steering and brake control thereby enhancing towing safety. The addition of a friction/hydraulic sway control also dampens sway caused by traffic and crosswinds and contributes positively to tow vehicle and trailer stability. Trailer sway control and a weight distributing (load equalizing) hitch are recommended for heavier Tongue Weights (TW) and may be required depending on vehicle and trailer configuration/loading to comply with Gross Axle Weight Rating (GAWR) requirements.

WARNING!

- **An improperly adjusted Weight Distributing Hitch system may reduce handling, stability, braking performance, and could result in a collision.**
- **Weight Distributing Systems may not be compatible with Surge Brake Couplers. Consult with your hitch and trailer manufacturer or a reputable Recreational Vehicle dealer for additional information.**

Trailer Hitch Classification

The following chart provides the industry standard for the maximum trailer weight a given trailer hitch class can tow and should be used to assist you in selecting the correct trailer hitch for your intended towing condition.

Trailer Hitch Classification Definitions	
Class	**Max. Trailer Hitch Industry Standards**
Class I - Light Duty	2,000 lbs (907 kg)
Class II - Medium Duty	3,500 lbs (1,587 kg)
Class III - Heavy Duty	5,000 lbs (2,267 kg)
Class IV - Extra Heavy Duty	10,000 lbs (4,535 kg)
Refer to the "Trailer Towing Weights (Maximum Trailer Weight Ratings)" chart for the Maximum Gross Trailer Weight (GTW) towable for your given drivetrain.	
All trailer hitches should be professionally installed on your vehicle.	

Trailer Towing Weights (Maximum Trailer Weight Ratings)

Engine/Transmission	Frontal Area	Max. GTW (Gross Trailer Weight)	Max. Tongue Weight (See Note)
3.6L Automatic	22 sq ft (2.04 sq m)	1,000 lbs (454 kg)	100 lbs (45 kg)
5.7L Automatic	32 sq ft (2.97 sq m)	1,000 lbs (454 kg)	100 lbs (45 kg)
Refer to local laws for maximum trailer towing speeds.			

NOTE: The trailer tongue weight must be considered as part of the combined weight of occupants and cargo, and it should never exceed the weight referenced on the "Tire and Loading Information" placard. Refer to "Tire Safety Information" in "Servicing And Maintenance" for further information.

Trailer And Tongue Weight

Never exceed the maximum tongue weight stamped on your bumper or trailer hitch.

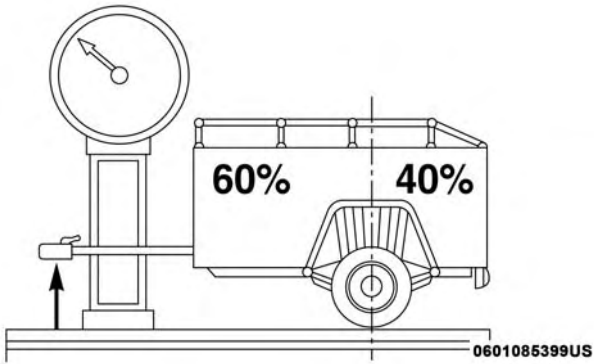

Weight Distribution

CAUTION!

Always load a trailer with 60% of the weight in the front of the trailer. This places 10% of the GTW on the

(Continued)

CAUTION! *(Continued)*

tow hitch of your vehicle. Loads balanced over the wheels or heavier in the rear can cause the trailer to sway severely side to side which will cause loss of control of the vehicle and trailer. Failure to load trailers heavier in front is the cause of many trailer collisions.

Consider the following items when computing the weight on the rear axle of the vehicle:

- The tongue weight of the trailer.
- The weight of any other type of cargo or equipment put in or on your vehicle.
- The weight of the driver and all passengers.

NOTE: Remember that everything put into or on the trailer adds to the load on your vehicle. Also, additional factory-installed options or dealer-installed options must be considered as part of the total load on your vehicle. Refer to the "Tire And Loading Information" placard for the maximum combined weight of occupants and cargo for your vehicle.

Towing Requirements

To promote proper break-in of your new vehicle drivetrain components, the following guidelines are recommended.

WARNING!

Improper towing can lead to a collision. Follow these guidelines to make your trailer towing as safe as possible:

- **Make certain that the load is secured in the trailer and will not shift during travel. When trailering cargo that is not fully secured, dynamic load shifts can occur that may be difficult for the driver to control. You could lose control of your vehicle and have a collision.**
- **When hauling cargo or towing a trailer, do not overload your vehicle or trailer. Overloading can cause a loss of control, poor performance or damage to brakes, axle, engine, transmission, steering, suspension, chassis structure or tires.**

(Continued)

WARNING! ***(Continued)***

- **Safety chains must always be used between your vehicle and trailer. Always connect the chains to the hook retainers of the vehicle hitch. Cross the chains under the trailer tongue and allow enough slack for turning corners.**
- **Vehicles with trailers should not be parked on a grade. When parking, apply the parking brake on the tow vehicle. Put the tow vehicle transmission in PARK. Always, block or "chock" the trailer wheels.**
- **GCWR must not be exceeded.**
- **Total weight must be distributed between the tow vehicle and the trailer such that the following four ratings are not exceeded:**

  1. Max loading as defined on the "Tire and Loading Information" placard.

  2. GTW

  3. GAWR

  4. Tongue weight rating for the trailer hitch utilized.

Perform the maintenance listed in the "Scheduled Servicing". Refer to "Scheduled Servicing" in "Servicing And Maintenance" for the proper maintenance intervals. When towing a trailer, never exceed the GAWR or GCWR ratings.

CAUTION!

- **Do not tow a trailer at all during the first 500 miles (805 km) the new vehicle is driven. The engine, axle or other parts could be damaged.**
- **Then, during the first 500 miles (805 km) that a trailer is towed, do not drive over 50 mph (80 km/h) and do not make starts at full throttle. This helps the engine and other parts of the vehicle wear in at the heavier loads.**

Towing Requirements — Tires

- Do not attempt to tow a trailer while using a compact spare tire.
- Do not drive more than 50 mph (80 km/h) when towing while using a full size spare tire.
- Proper tire inflation pressures are essential to the safe and satisfactory operation of your vehicle. Refer to "Tires" in "Servicing And Maintenance" for proper tire inflation procedures.
- Check the trailer tires for proper tire inflation pressures before trailer usage.
- Check for signs of tire wear or visible tire damage before towing a trailer. Refer to "Tires" in "Servicing And Maintenance" for the proper inspection procedure.
- When replacing tires, refer to "Tires" in "Servicing And Maintenance" for the proper tire replacement procedures. Replacing tires with a higher load carrying capacity will not increase the vehicle's GVWR and GAWR limits.

Towing Requirements — Trailer Brakes

- Do **not** interconnect the hydraulic brake system or vacuum system of your vehicle with that of the trailer. This could cause inadequate braking and possible personal injury.
- An electronically actuated trailer brake controller is required when towing a trailer with electronically actuated brakes. When towing a trailer equipped with a hydraulic surge actuated brake system, an electronic brake controller is not required.

- Trailer brakes are recommended for trailers over 1,000 lbs (453 kg) and required for trailers in excess of 2,000 lbs (907 kg).

WARNING!

- **Do not connect trailer brakes to your vehicle's hydraulic brake lines. It can overload your brake system and cause it to fail. You might not have brakes when you need them and could have an accident.**
- **Towing any trailer will increase your stopping distance. When towing, you should allow for additional space between your vehicle and the vehicle in front of you. Failure to do so could result in an accident.**

CAUTION!

If the trailer weighs more than 1,000 lbs (453 kg) loaded, it should have its own brakes and they should be of adequate capacity. Failure to do this could lead to accelerated brake lining wear, higher brake pedal effort, and longer stopping distances.

Towing Requirements — Trailer Lights And Wiring

Whenever you pull a trailer, regardless of the trailer size, stoplights and turn signals on the trailer are required for motoring safety.

The Trailer Tow Package may include a four- and seven-pin wiring harness. Use a factory approved trailer harness and connector.

NOTE: Do not cut or splice wiring into the vehicle's wiring harness.

The electrical connections are all complete to the vehicle but you must mate the harness to a trailer connector. Refer to the following illustrations.

NOTE:

- Disconnect trailer wiring connector from the vehicle before launching a boat (or any other device plugged into vehicle's electrical connect) into water.

- Be sure to reconnect after clear from water area.

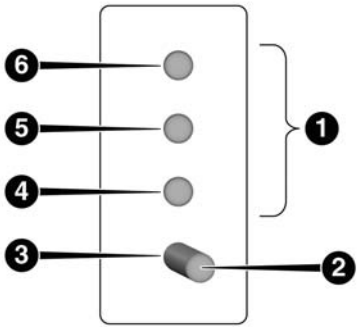

Four-Pin Connector

1 — Female Pins
2 — Male Pin
3 — Ground
4 — Park
5 — Left Stop/Turn
6 — Right Stop/Turn

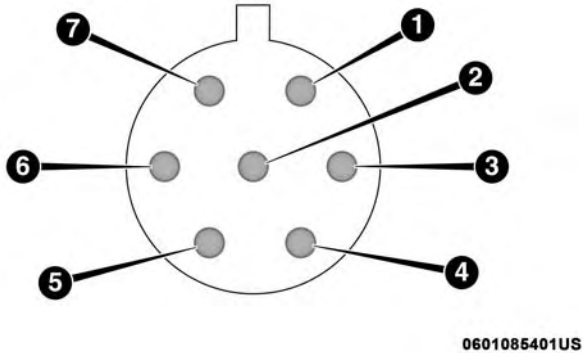

Seven-Pin Connector

1 — Battery
2 — Backup Lamps
3 — Right Stop/Turn
4 — Electric Brakes
5 — Ground
6 — Left Stop/Turn
7 — Running Lamps

Towing Tips

Before setting out on a trip, practice turning, stopping, and backing up the trailer in an area located away from heavy traffic.

Automatic Transmission

Select the DRIVE range when towing. The transmission controls include a drive strategy to avoid frequent shifting when towing. However, if frequent shifting does occur while in DRIVE, you can use the AutoStick shift control (if equipped) to manually select a lower gear.

NOTE: Using a lower gear while operating the vehicle under heavy loading conditions will improve performance and extend transmission life by reducing excessive shifting and heat buildup. This action will also provide better engine braking.

Speed Control — If Equipped

- Do not use on hilly terrain or with heavy loads.
- When using the speed control, if you experience speed drops greater than 10 mph (16 km/h), disengage until you can get back to cruising speed.
- Use speed control in flat terrain and with light loads to maximize fuel efficiency.

AutoStick — If Equipped

- When using the AutoStick shift control, select the highest gear that allows for adequate performance and avoids frequent downshifts. For example, choose “5” if the desired speed can be maintained. Choose “4” or “3” if needed to maintain the desired speed.
- To prevent excess heat generation, avoid continuous driving at high RPM. Reduce vehicle speed as necessary to avoid extended driving at high RPM. Return to a higher gear or vehicle speed when grade and road conditions allow.

Cooling System

To reduce potential for engine and transmission overheating, take the following actions:

City Driving

- In city traffic — while stopped, place the transmission in NEUTRAL, but do not increase engine idle speed.

Highway Driving

- Reduce speed.
- Temporarily turn off air conditioning.

RECREATIONAL TOWING (BEHIND MOTORHOME, ETC.)

Recreational towing (with all four wheels on the ground, or using a tow dolly) is **NOT ALLOWED**. The only acceptable method for towing this vehicle (behind another vehicle) is on a vehicle trailer with all four wheels **OFF** the ground.

CAUTION!

Towing this vehicle in violation of the above requirements can cause severe transmission and/or transfer case damage. Damage from improper towing is not covered under the New Vehicle Limited Warranty.

DRIVING TIPS

Driving On Slippery Surfaces

Information in this section will aid in safe controlled launches in adverse conditions.

Acceleration

Rapid acceleration on snow covered, wet, or other slippery surfaces may cause the driving wheels to pull erratically to the right or left. This phenomenon occurs when there is a difference in the surface traction under the front (driving) wheels.

WARNING!

Rapid acceleration on slippery surfaces is dangerous. Unequal traction can cause sudden pulling of the front wheels. You could lose control of the vehicle and possibly have a collision. Accelerate slowly and carefully whenever there is likely to be poor traction (ice, snow, wet, mud, loose sand, etc.).

Traction

When driving on wet or slushy roads, it is possible for a wedge of water to build up between the tire and road surface. This is known as hydroplaning and may cause partial or complete loss of vehicle control and stopping ability. To reduce this possibility, the following precautions should be observed:

- Slow down during rainstorms or when the roads are slushy.
- Slow down if the road has standing water or puddles.
- Replace tires when tread wear indicators first become visible.
- Keep tires properly inflated.

- Maintain sufficient distance between your vehicle and the vehicle in front of you to avoid a collision in a sudden stop.

Your vehicle may be equipped with a Limited Slip Differential (LSD) that reduces, but does not eliminate, the amount of wheel slip across a given axle for improved handling.

Driving Through Water

Driving through water more than a few inches/centimeters deep will require extra caution to ensure safety and prevent damage to your vehicle.

Flowing/Rising Water

WARNING!

Do not drive on or across a road or path where water is flowing and/or rising (as in storm run-off). Flowing water can wear away the road or path's surface and cause your vehicle to sink into deeper water. Furthermore, flowing and/or rising water can carry your vehicle away swiftly. Failure to follow this warning may result in injuries that are serious or fatal to you, your passengers, and others around you.

Shallow Standing Water

Although your vehicle is capable of driving through shallow standing water, consider the following Cautions and Warnings before doing so.

WARNING!

- **Driving through standing water limits your vehicle's traction capabilities. Do not exceed 5 mph (8 km/h) when driving through standing water.**
- **Driving through standing water limits your vehicle's braking capabilities, which increases stopping distances. Therefore, after driving through standing water, drive slowly and lightly press on the brake pedal several times to dry the brakes.**
- **Failure to follow these warnings may result in injuries that are serious or fatal to you, your passengers, and others around you.**

CAUTION!

- **Always check the depth of the standing water before driving through it. Never drive through standing water that is deeper than the bottom of the tire rims mounted on the vehicle.**
- **Determine the condition of the road or the path that is under water and if there are any obstacles in the way before driving through the standing water.**
- **Do not exceed 5 mph (8 km/h) when driving through standing water. This will minimize wave effects.**
- **Driving through standing water may cause damage to your vehicle's drivetrain components. Always inspect your vehicle's fluids (i.e., engine oil, transmission, axle, etc.) for signs of contamination (i.e., fluid that is milky or foamy in appearance) after driving through standing water. Do not continue to operate the vehicle if any fluid appears contaminated, as this may result in further damage. Such damage is not covered by the New Vehicle Limited Warranty.**
- **Getting water inside your vehicle's engine can cause it to lock up and stall out, and cause serious internal damage to the engine. Such damage is not covered by the New Vehicle Limited Warranty.**

IN CASE OF EMERGENCY

CONTENTS

- HAZARD WARNING FLASHERS 300
- ASSIST AND SOS MIRROR — IF EQUIPPED 300
- BULB REPLACEMENT 305
  - Replacement Bulbs 305
  - Replacing Exterior Bulbs 307
- FUSES 310
  - General Information 311
  - Underhood Fuses 312
  - Rear Interior Fuses 316
- JACKING AND TIRE CHANGING 321
  - Jack Location/Spare Tire Stowage 321
  - Preparations For Jacking 323
  - Jacking And Changing A Tire 324
  - Road Tire Installation 328
- JUMP STARTING 329
  - Preparations For Jump Start 329
  - Jump Starting Procedure 330
- IF YOUR ENGINE OVERHEATS 332
- MANUAL PARK RELEASE 333
- FREEING A STUCK VEHICLE 335
- TOWING A DISABLED VEHICLE 336
  - All Wheel Drive (AWD) Models 338
  - Rear-Wheel Drive (RWD) Models 338
- ENHANCED ACCIDENT RESPONSE SYSTEM (EARS) 339
- EVENT DATA RECORDER (EDR) 339

HAZARD WARNING FLASHERS

The Hazard Warning flasher switch is located on the switch bank just above the climate controls.

Push the switch to turn on the Hazard Warning flasher. When the switch is activated, all directional turn signals will flash on and off to warn oncoming traffic of an emergency. Push the switch a second time to turn off the Hazard Warning flashers.

This is an emergency warning system and it should not be used when the vehicle is in motion. Use it when your vehicle is disabled and it is creating a safety hazard for other motorists.

When you must leave the vehicle to seek assistance, the Hazard Warning flashers will continue to operate even though the ignition is placed in the OFF position.

NOTE: With extended use, the Hazard Warning flashers may discharge the battery.

ASSIST AND SOS MIRROR — IF EQUIPPED

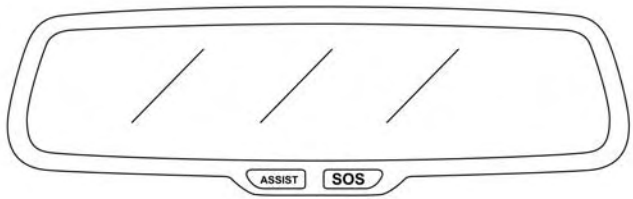

0306114048US

Assist And SOS Mirror

If equipped, the rearview mirror contains an ASSIST and a SOS button.

WARNING!

ALWAYS obey traffic laws and pay attention to the road. ALWAYS drive safely with your hands on the steering wheel. You have full responsibility and assume all risks related to the use of the Uconnect and SiriusXM Guardian features and applications in this vehicle. Only use Uconnect features and SiriusXM Guardian services when it is safe to do so. Failure to do so may result in an accident involving serious injury or death.

NOTE:

- Your vehicle may be transmitting data as authorized by the subscriber.
- The SOS and ASSIST buttons will only function if you are connected to an operable LTE (voice/data) or 4G (data) network. Other Uconnect services will only be operable if your SiriusXM Guardian service is active and you are connected to an operable LTE (voice/data) or 4G (data) network.

ASSIST Call

The ASSIST Button is used to automatically connect you to any one of the following support centers:

- Roadside Assistance – If you get a flat tire, or need a tow, just push the ASSIST button and you will be connected to a representative for assistance. Roadside Assistance will know what vehicle you're driving and its location. Additional fees may apply for roadside Assistance.
- SiriusXM Guardian Customer Care – In-vehicle support for SiriusXM Guardian.
- Vehicle Customer Care – Total support for all other vehicle issues.

SOS Call

1. Push the SOS Call button on the Rearview Mirror.

NOTE: In case the SOS Call button is pushed in error, there will be a ten second delay before the SOS Call system initiates a call to a SOS operator. To cancel the SOS Call connection, push the SOS call button on the Rearview Mirror or press the cancellation button on the Device Screen. Termination of the SOS Call will turn off the green LED light on the Rearview Mirror.

2. The LED light located between the ASSIST and SOS buttons on the Rearview Mirror will turn green once a connection to a SOS operator has been made.

3. Once a connection between the vehicle and a SOS operator is made, the SOS Call system may transmit the following important vehicle information to a SOS operator:
   - Indication that the occupant placed a SOS Call.
   - The vehicle brand.
   - The last known GPS coordinates of the vehicle.

4. You should be able to speak with the SOS operator through the vehicle audio system to determine if additional help is needed.

WARNING!

ALWAYS obey traffic laws and pay attention to the road. ALWAYS drive safely with your hands on the steering wheel. You have full responsibility and assume all risks related to the use of the Uconnect and SiriusXM Guardian features and applications in this vehicle. Only use Uconnect features and SiriusXM

(Continued)

WARNING! *(Continued)*

Guardian services when it is safe to do so. Failure to do so may result in an accident involving serious injury or death.

NOTE:

- Your vehicle may be transmitting data as authorized by the subscriber.
- Once a connection is made between the vehicle's SOS Call system and the SOS operator, the SOS operator may be able to open a voice connection with the vehicle to determine if additional help is needed. Once the SOS operator opens a voice connection with the vehicle's SOS Call system, the operator should be able to speak with you or other vehicle occupants and hear sounds occurring in the vehicle. The vehicle's SOS Call system will attempt to remain connected with the SOS operator until the SOS operator terminates the connection.

5. The SOS operator may attempt to contact appropriate emergency responders and provide them with important vehicle information and GPS coordinates.

WARNING!

- **If anyone in the vehicle could be in danger (e.g., fire or smoke is visible, dangerous road conditions or location), do not wait for voice contact from an Emergency Services Agent. All occupants should exit the vehicle immediately and move to a safe location.**
- **Never place anything on or near the vehicle's operable network and GPS antennas. You could prevent operable network and GPS signal reception, which can prevent your vehicle from placing an emergency call. An operable network and GPS signal reception is required for the SOS Call system to function properly.**
- **The SOS Call system is embedded into the vehicle's electrical system. Do not add aftermarket electrical equipment to the vehicle's electrical system. This may prevent your vehicle from sending a signal to initiate an emergency call. To avoid interference that can cause the SOS Call system to fail, never add aftermarket equipment (e.g., two-way mobile radio, CB radio, data recorder, etc.) to your vehicle's electrical system or modify the antennas on your vehicle. IF YOUR VEHICLE LOSES BATTERY POWER FOR**

(Continued)

WARNING! ***(Continued)***

ANY REASON (INCLUDING DURING OR AFTER AN ACCIDENT), THE UCONNECT FEATURES, APPS AND SERVICES, AMONG OTHERS, WILL NOT OPERATE.

- **Modifications to any part of the SOS Call system could cause the air bag system to fail when you need it. You could be injured if the air bag system is not there to help protect you.**

SOS Call System Limitations

Vehicles sold in Mexico **DO NOT** have SOS Call system capabilities.

SOS or other emergency line operators in Mexico may not answer or respond to SOS system calls.

If the SOS Call system detects a malfunction, any of the following may occur at the time the malfunction is detected, and at the beginning of each ignition cycle:

- The Rearview Mirror light located between the ASSIST and SOS buttons will continuously be illuminated red.
- The Device Screen will display the following message "Vehicle device requires service. Please contact your dealer."

- An In-Vehicle Audio message will state "Vehicle device requires service. Please contact your dealer."

WARNING!

- **Ignoring the Rearview Mirror light could mean you will not have SOS Call services. If the Rearview Mirror light is illuminated, have an authorized dealer service the SOS Call system immediately.**
- **The Occupant Restraint Control module turns on the air bag Warning Light on the instrument panel if a malfunction in any part of the system is detected. If the Air Bag Warning Light is illuminated, have an authorized dealer service the Occupant Restraint Control system immediately.**

Even if the SOS Call system is fully functional, factors beyond FCA US LLC's control may prevent or stop the SOS Call system operation. These include, but are not limited to, the following factors:

- Delayed accessories mode is active.
- The ignition is in the OFF position.
- The vehicle's electrical systems are not intact.
- The SOS Call system software and/or hardware are damaged during a crash.
- The vehicle battery loses power or becomes disconnected during a vehicle crash.
- LTE (voice/data) or 4G (data) network and/or Global Positioning Satellite signals are unavailable or obstructed.
- Equipment malfunction at the SOS operator facility.
- Operator error by the SOS operator.
- LTE (voice/data) or 4G (data) network congestion.
- Weather.
- Buildings, structures, geographic terrain, or tunnels.

WARNING!

ALWAYS obey traffic laws and pay attention to the road. ALWAYS drive safely with your hands on the steering wheel. You have full responsibility and assume all risks related to the use of the Uconnect and SiriusXM Guardian features and applications in this vehicle. Only use Uconnect features and SiriusXM Guardian services when it is safe to do so. Failure to do so may result in an accident involving serious injury or death.

NOTE:

- Your vehicle may be transmitting data as authorized by the subscriber.
- Never place anything on or near the vehicle's LTE (voice/data) or 4G (data) and GPS antennas. You could prevent LTE (voice/data) or 4G (data) and GPS signal reception, which can prevent your vehicle from placing an emergency call. An operable LTE (voice/data) or 4G (data) network connection and a GPS signal is required for the SOS Call system to function properly.

General Information

This device complies with Part 15 of the FCC Rules. Operation is subject to the following two conditions: (1) This device may not cause harmful interference, and (2) this device must accept any interference received, including interference that may cause undesired operation.

NOTE: Changes or modifications not expressly approved by the party responsible for compliance could void the user's authority to operate the equipment.

CAUTION!

To avoid damage to the mirror during cleaning, never spray any cleaning solution directly onto the mirror. Apply the solution onto a clean cloth and wipe the mirror clean.

BULB REPLACEMENT

Replacement Bulbs

All of the interior bulbs are glass wedge base or glass cartridge types. Aluminum base bulbs are not approved and should not be used for replacement.

Interior Bulbs

	Bulb Number
Rear Courtesy/Reading Lamps	W5W
Rear Compartment (Trunk) Lamp	562
Overhead Console Reading Lamps	578
Visor Vanity Lamps	A6220
Glove Compartment Lamp – If Equipped	194
Door Courtesy	562
Shift Indicator Lamp	JKLE14140
Optional Door Map Pocket/Cupholder	LED (Serviced At Authorized Dealer)
For lighted switches, see your authorized dealer for replacement instructions.	

Exterior Bulbs

	Bulb Number
Low Beam/High Beam (Bi-Halogen Headlamp)	9005HL+
Low Beam/High Beam (Bi-Xenon Headlamp)	D3S (Serviced At Authorized Dealer)
Front Turn Signal Lamp	PSY24WSV
Front Park Lamp	LED (Serviced At Authorized Dealer)
Daytime Running Lamp	LED (Serviced At Authorized Dealer)
Front Fog Lamp – If Equipped	LED (Serviced At Authorized Dealer)

	Bulb Number
Front Sidemarker Lamp	LED (Serviced At Authorized Dealer)
Rear Tail/Stop/Turn Lamp	LED (Serviced At Authorized Dealer)
Rear Sidemarker Lamp	LED (Serviced At Authorized Dealer)
Backup Lamp	LED (Serviced At Authorized Dealer)
Center High Mount Stop Lamp (CHMSL)	LED (Serviced At Authorized Dealer)
License	LED (Serviced At Authorized Dealer)

Replacing Exterior Bulbs

High Intensity Discharge Headlamps (HID) — If Equipped

The headlamps are a type of high voltage discharge tube. High voltage can remain in the circuit even with the headlamp switch off and the ignition turned to the OFF position. **Because of this, you should not attempt to service a headlamp bulb yourself. If a headlamp bulb fails, take your vehicle to an authorized dealer for service.**

WARNING!

A transient high voltage occurs at the bulb sockets of HID headlamps when the headlamp switch is turned ON. It may cause serious electrical shock or electrocution if not serviced properly. See your authorized dealer for service.

NOTE: On vehicles equipped with HID headlamps, when the headlamps are turned on, there is a blue hue to the lights. This diminishes and becomes more white after approximately 10 seconds, as the system charges.

Standard Low Beam And High Beam Headlamp

1. Open the hood.

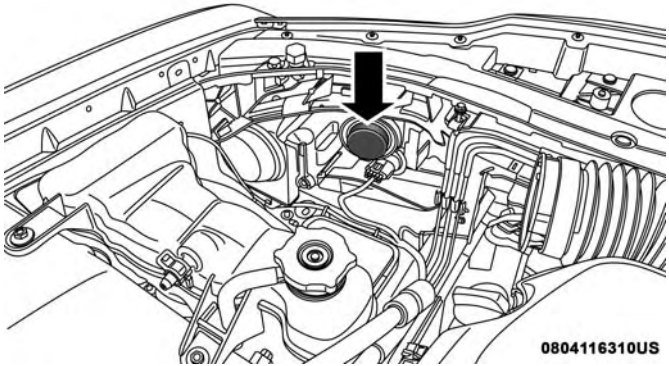

Headlamp Assembly Location

NOTE: Removal of the air cleaner filter housing may be necessary prior to replacing bulbs in the headlamp assembly on the driver side of the vehicle.

2. Reach behind the headlamp housing to access the headlamp (outboard) bulb cap.

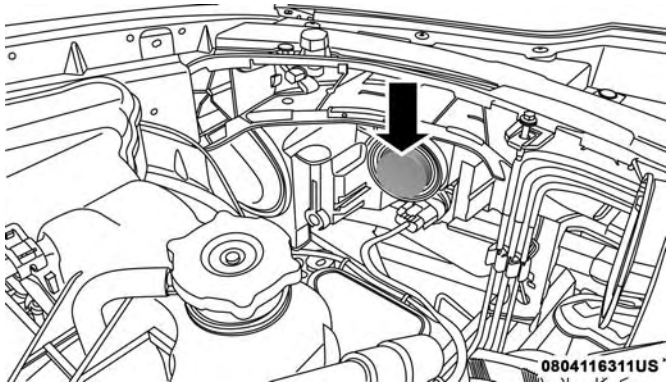

Headlamp Bulb Cap

3. Firmly grasp the cap and rotate it counterclockwise to unlock it.

4. Twist the headlamp bulb assembly counterclockwise, and then pull it out of the headlamp assembly.

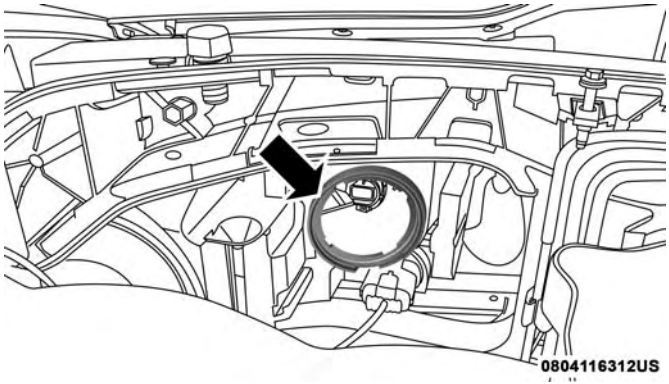

Headlamp Assembly

5. Disconnect the bulb from the wiring assembly and install the replacement bulb.
6. Reinstall the bulb and wiring assembly into the headlamp assembly, and then turn it clockwise.
7. Install the headlamp bulb cap in the headlamp housing and rotate it clockwise to lock it.

CAUTION!

Do not touch the new bulb with your fingers. Oil contamination will severely shorten bulb life. If the bulb comes in contact with any oily surface, clean the bulb with rubbing alcohol.

Front Turn Signal Lamps

The Front Park/Turn function is part of the headlamp assembly and use LED lamps that are not serviceable separately. The headlamps must be replaced as an assembly, see your authorized dealer.

Front Fog Lamp

The Front Fog Lamps use LED sources that are not serviceable separately. The Front Fog Lamp must be replaced as an assembly; see your authorized dealer.

Front/Rear Side Marker Lamp

The Side Markers use LED lamps that are not serviceable separately. The Side Markers must be replaced as an assembly, see your authorized dealer.

Rear Backup Lamp And Turn Signal Lamps

The Rear Backup and Turn Signal Lamp use LED sources that are not serviceable separately. The Rear Lamps must be replaced as an assembly, please see your authorized dealer.

License Lamp

The License Lamp uses an LED source that is not serviceable separately. The License Lamp must be replaced as an assembly; see your authorized dealer.

Center High Mounted Stop Lamp (CHMSL)

The CHMSL Lamp uses LED sources that are not serviceable separately. The CHMSL Lamp must be replaced as an assembly; see your authorized dealer.

FUSES

WARNING!

- **When replacing a blown fuse, always use an appropriate replacement fuse with the same amp rating as the original fuse. Never replace a fuse with another fuse of higher amp rating. Never replace a blown fuse with metal wires or any other material. Do not place a fuse inside a circuit breaker cavity or vice versa. Failure to use proper fuses may result in serious personal injury, fire and/or property damage.**
- **Before replacing a fuse, make sure that the ignition is off and that all the other services are switched off and/or disengaged.**
- **If the replaced fuse blows again, contact an authorized dealer.**
- **If a general protection fuse for safety systems (air bag system, braking system), power unit systems (engine system, transmission system) or steering system blows, contact an authorized dealer.**

General Information

The fuses protect electrical systems against excessive current.

When a device does not work, you must check the fuse element inside the blade fuse for a break/melt.

Also, please be aware that when using power outlets for extended periods of time with the engine off may result in vehicle battery discharge.

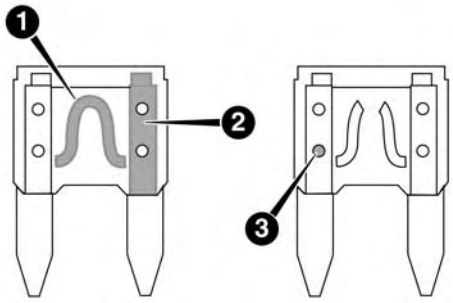

0704085531US

Blade Fuses

1 — Fuse Element
2 — Blade Fuse with a good/functional fuse element.
3 — Blade fuse with a NOT functional / BAD fuse element (blown fuse).

Underhood Fuses

The Front Power Distribution Center is located in the engine compartment. This module contains fuses and relays. Fuse cavity location and descriptions are printed on the inside of the power distribution center cover.

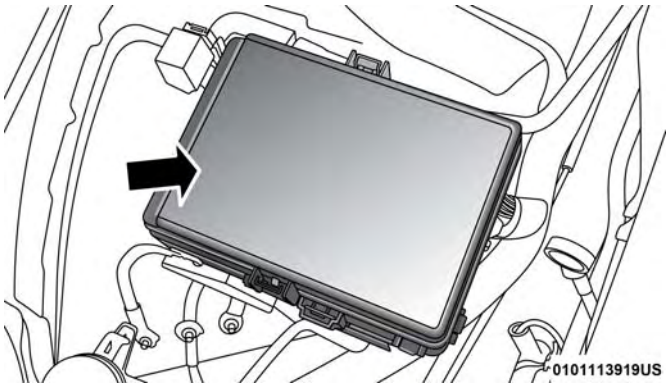

Front Power Distribution Center

CAUTION!

- **When installing the power distribution center cover, it is important to ensure the cover is properly positioned and fully latched. Failure to do so may allow water to get into the power distribution center and possibly result in an electrical system failure.**
- **When replacing a blown fuse, it is important to use only a fuse having the correct amperage rating. The use of a fuse with a rating other than indicated may result in a dangerous electrical system overload. If a properly rated fuse continues to blow, it indicates a problem in the circuit that must be corrected.**

Cavity	Cartridge Fuse	Mini-Fuse	Description
1	–	–	Fuse – Spare
2	40 Amp Green	–	Radiator Fan #1 – (Non 6.2L Supercharged)
3	50 Amp Red	–	Electric Power Steering #1 – If Equipped
4	30 Amp Pink	–	Starter
5	40 Amp Green	–	Anti Lock Brake
6	30 Amp Pink	–	Anti Lock Brake
7	20 Amp Blue	–	Police Ignition Run / ACC #1
8	50 Amp Red / 20 Amp Blue	–	Radiator Fan (6.2L Supercharged) / Police Ignition Run / ACC # 2
9	–	20 Amp Yellow	All-Wheel Drive Module – If Equipped
10	–	10 Amp Red	Intrusion MOD (300) – If Equipped / Under Hood Lamp – Police
11	–	20 Amp Yellow	Horns
12	–	10 Amp Red	Air Conditioning Clutch
13	–	–	Fuse – Spare
14	–	–	Fuse – Spare
15	–	20 Amp Yellow	Left HID – If Equipped
16	–	20 Amp Yellow	Right HID – If Equipped
18	50 Amp Red	–	Radiator Fan – (Non 6.2L Supercharged)
19	50 Amp Red	–	Electric Power Steering #2 – If Equipped

Cavity	Cartridge Fuse	Mini-Fuse	Description
20	30 Amp Pink	–	Wiper Motor
21	30 Amp Pink 20 Amp Blue – Police	–	Headlamp Washers – If Equipped Police Bat Feed #2
22	40 Amp Green / 20 Amp Blue – Police	–	Engine Cooling Pump (6.2L Supercharged) / Police Bat Feed # 3
23	20 Amp Blue	–	Police Bat Feed # 1
24	50 Amp Red / 20 Amp Blue	–	Radiator Fan (6.2L Supercharged) / Police Ignition Run/ACC Feed # 3
28	–	–	Fuse – Spare
29	–	15 Amp Blue	Transmission Control Module (Challenger / Charger Police) / Electronic Shift Module (Challenger)
30	–	–	Fuse – Spare
31	–	25 Amp Clear	Engine Module
32	–	–	Fuse – Spare
33	–	–	Fuse – Spare
34	–	25 Amp Clear	Powertrain #1
35	–	20 Amp Yellow	Powertrain #2
36	–	10 Amp Red	Anti-Lock Brake Module / Steering Column Lock Module (300 if equipped)

Cavity	Cartridge Fuse	Mini-Fuse	Description
37	–	10 Amp Red	Engine Controller / Rad Fan Relays (Charger/300) / Electric Power Steering Module (Charger/300) / 5-Speed TCM
38	–	10 Amp Red	Airbag Module
39	–	10 Amp Red	EPS (Challenger) / EHPS (Police) / AC Clutch Relay / Vacuum Pump Relay / Rad Fan Relays (Challenger)
48	–	10 Amp Red	AWD Module / Front Axle Disconnect – If Equipped
49	–	–	Fuse – Spare
50	–	–	Fuse – Spare
51	–	20 Amp Yellow	Vacuum Pump
52	–	5 Amp Tan	Adaptive Cruise – If Equipped
53	–	–	Fuse – Spare

Rear Interior Fuses

There is also a power distribution center located in the trunk under the spare tire access panel. This center contains fuses and relays. Fuse cavity location and descriptions are printed on the inside of the power distribution center cover.

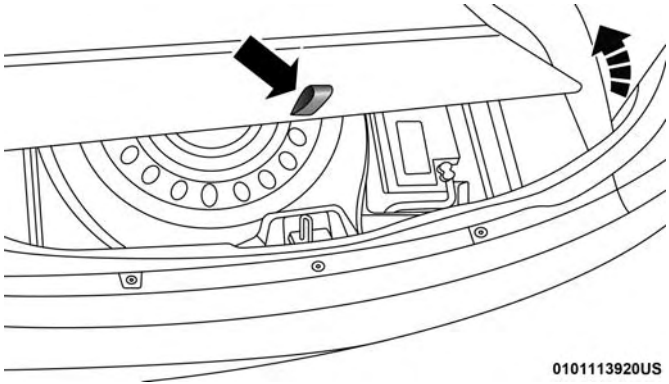

Opening The Access Cover

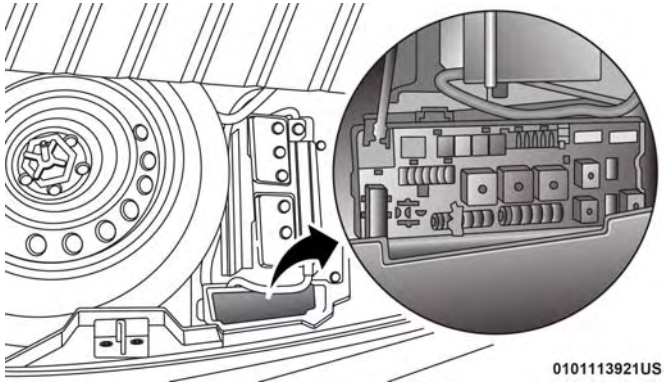

Rear Power Distribution Center

CAUTION!

- **When installing the power distribution center cover, it is important to ensure the cover is properly positioned and fully latched. Failure to do so may allow water to get into the power distribution center and possibly result in an electrical system failure.**

(Continued)

CAUTION! *(Continued)*

- **When replacing a blown fuse, it is important to use only a fuse having the correct amperage rating. The use of a fuse with a rating other than indicated may result in a dangerous electrical system overload. If a properly rated fuse continues to blow, it indicates a problem in the circuit that must be corrected.**

Cavity	Cartridge Fuse	Mini-Fuse	Description
2	60 Amp Yellow	–	Front PDC Feed #1
3	–	–	Fuse – Spare
4	60 Amp Yellow	–	Front PDC Feed #2
5	30 Amp Pink 20 Amp Blue – Police	–	Sunroof/Dome Lamp – Police
6	40 Amp Green	–	Exterior Lighting #1
7	40 Amp Green	–	Exterior Lighting #2
8	30 Amp Pink	–	Interior Lighting
9	40 Amp Green	–	Power Locks
10	30 Amp Pink	–	Driver Door Control Module
11	30 Amp Pink	–	Passenger Door Control Module

Cavity	Cartridge Fuse	Mini-Fuse	Description
12	–	20 Amp Yellow	Dual USB Center Console Rear/Cigar Lighter IP – If Equipped
15	40 Amp Green	–	HVAC Blower
16	20 Amp Blue	–	Left Spot Lamp – Police
17	20 Amp Blue	–	Right Spot Lamp – Police
18	30 Amp Pink	–	Mod Network Interface – Police
19	–	–	Fuse – Spare
20	–	–	Fuse – Spare
21	30 Amp Pink	–	Fuel Pump (Non 6.2L SRT HO)
22	–	5 Amp Tan	Cyber Gateway Mod
23	–	10 Amp Red	Fuel Door – If Equipped/Diagnostic Port
24	–	10 Amp Red	Integrated Center Stack
25	–	10 Amp Red	Tire Pressure Monitor
26	–	15 Amp Blue	Cygnus Transmission Module (Charger/300) / Electronic Shift Module (Charger/300)
27	–	25 Amp Clear	Amplifier – If Equipped
31	–	25 Amp Breaker	Power Seats – If Equipped
32	–	15 Amp Blue	HVAC Module/Cluster
33	–	15 Amp Blue	Ignition Switch/RF Hub Module/Steering Column Lock (300) – If Equipped

Cavity	Cartridge Fuse	Mini-Fuse	Description
34	–	10 Amp Red	Steering Column Module/Clock (300)
35	–	5 Amp Tan	Battery Sensor
36	–	15 Amp Blue	Electronic Exhaust Valve – If Equipped
37	–	20 Amp Yellow	Radio
38	–	20 Amp Yellow	Power Outlet Inside Arm Rest/Console Media Hub
40	30 Amp Pink	–	Fuel Pump (6.2L SRT HO – If Equipped)
41	30 Amp Pink	–	Fuel Pump (6.2L SRT HO – If Equipped)
42	30 Amp Pink	–	Rear Defrost
43	–	20 Amp Yellow	Comfort Seat And Steering Wheel Module (Heated Steering Wheel/RR Heated Seats)
44	–	10 Amp Red	Park Assist / Blind Spot / Rear View Camera
45	–	15 Amp Blue	Cluster / Rearview Mirror / Compass (Charger/300) / Humidity Sensor / Forward Facing Camera (Lane Departure) / Cyber Gateway
46	–	–	Fuse – Spare
47	–	10 Amp Red	Adaptive Front Lighting / Day Time Running Lamps – If Equipped
48	–	20 Amp Yellow	Active Suspension – (6.4L / 6.2L)
49	–	–	Fuse – Spare
50	–	–	Fuse – Spare

Cavity	Cartridge Fuse	Mini-Fuse	Description
51	–	20 Amp Yellow	Front Heated / Vented Seats – If Equipped
52	–	10 Amp Red	Heated Cupholders/Rear Heated Seat Switches – If Equipped
53	–	10 Amp Red	HVAC Module/In Vehicle Temperature Sensor
54	–	–	Fuse – Spare
55	–	–	Fuse – Spare
56	–	–	Fuse – Spare
57	–	–	Fuse – Spare
58	–	10 Amp Red	Airbag Module
59	–	20 Amp Yellow	Adjustable Pedals – Police
60	–	–	Fuse – Spare
61	–	–	Fuse – Spare
62	–	–	Fuse – Spare
63	–	–	Fuse – Spare
64	–	25 Amp Breaker	Rear Windows (Charger/300)
65	–	10 Amp Red	Airbag Module
66	–	–	Fuse – Spare
67	–	10 Amp Red	Rain and Light Sensor / Sunroof / Inside RR View Mirror / Police Run Acc Relay

Cavity	Cartridge Fuse	Mini-Fuse	Description
68	–	10 Amp Red	Dual USB Power Outlet – R/A Sense (Charger/300) Rear Sunshade (Charger/300) RR USB Timer
69	–	–	Fuse – Spare
70	–	–	Fuse – Spare

JACKING AND TIRE CHANGING

WARNING!

- **Do not attempt to change a tire on the side of the vehicle close to moving traffic. Pull far enough off the road to avoid the danger of being hit when operating the jack or changing the wheel.**
- **Being under a jacked-up vehicle is dangerous. The vehicle could slip off the jack and fall on you. You could be crushed. Never put any part of your body under a vehicle that is on a jack. If you need to get under a raised vehicle, take it to a service center where it can be raised on a lift.**
- **Never start or run the engine while the vehicle is on a jack.**

(Continued)

WARNING! ***(Continued)***

- **The jack is designed to be used as a tool for changing tires only. The jack should not be used to lift the vehicle for service purposes. The vehicle should be jacked on a firm level surface only. Avoid ice or slippery areas.**

Jack Location/Spare Tire Stowage

The jack and spare tire are both stowed under an access cover in the trunk. Follow these steps to access the jack and spare tire.

NOTE: The spare tire must be removed in order to access the jack.

1. Open the trunk.
2. Lift the access cover using the pull strap.

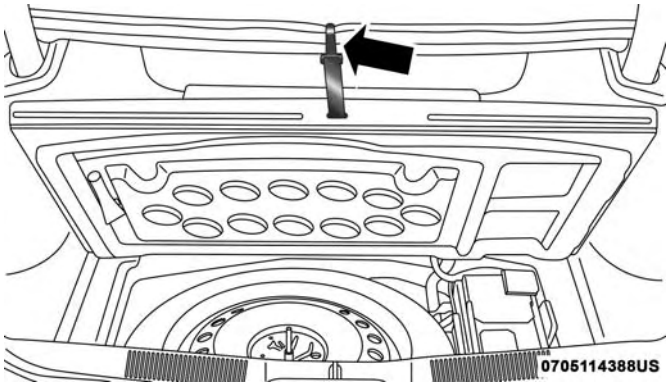

Opening The Access Panel

3. Rotate the fastener securing the spare tire counterclockwise to remove it.

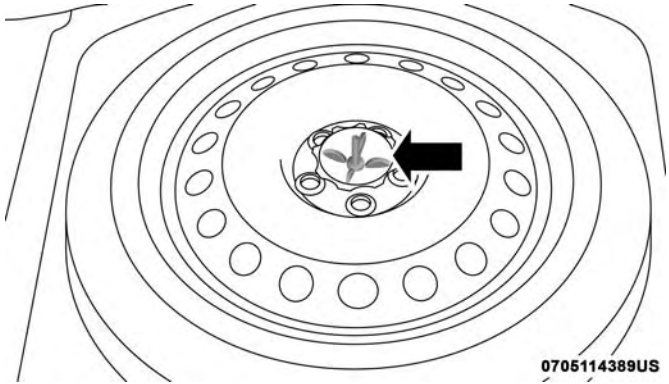

Spare Tire Fastener

4. Remove the spare tire.
5. Rotate the fastener securing the jack counterclockwise to remove it.

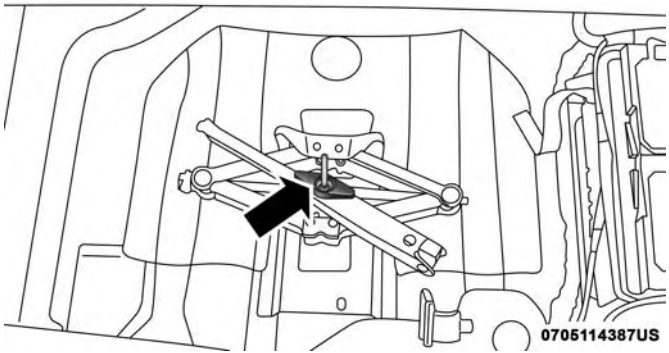

Jack Fastener

6. Remove the jack and lug wrench assembly from under the spare tire. Turn the jack screw to the left to loosen the lug wrench, and remove the wrench from the jack assembly.

WARNING!

A loose tire or jack thrown forward in a collision or hard stop could endanger the occupants of the vehicle. Always stow the jack parts and the spare tire in the places provided. Have the deflated (flat) tire repaired or replaced immediately.

Preparations For Jacking

1. Park the vehicle on a firm, level surface. Avoid ice or slippery areas.

WARNING!

Do not attempt to change a tire on the side of the vehicle close to moving traffic. Pull far enough off the road to avoid being hit when operating the jack or changing the wheel.

2. Turn on the Hazard Warning flasher.
3. Apply the parking brake.
4. Place the gear selector into PARK.
5. Turn the ignition to the OFF position.

6. Block both the front and rear of the wheel diagonally opposite the jacking position. For example, if the right front wheel is being changed, block the left rear wheel.

NOTE: Passengers should not remain in the vehicle when the vehicle is being jacked.

Jacking And Changing A Tire

WARNING!

Carefully follow these tire changing warnings to help prevent personal injury or damage to your vehicle:

- **Always park on a firm, level surface as far from the edge of the roadway as possible before raising the vehicle.**
- **Turn on the Hazard Warning flasher.**
- **Block the wheel diagonally opposite the wheel to be raised.**
- **Apply the parking brake firmly and set the transmission in PARK.**
- **Do not let any passenger sit in the vehicle when it is on a jack.**

(Continued)

WARNING! ***(Continued)***

- **Do not get under the vehicle when it is on a jack. If you need to get under a raised vehicle, take it to a service center where it can be raised on a lift.**
- **Only use the jack in the positions indicated and for lifting this vehicle during a tire change.**
- **If working on or near a roadway, be extremely careful of motor traffic.**

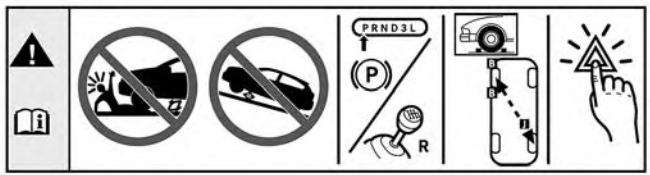

060600714

Jacking Warning Label

CAUTION!

Do not attempt to raise the vehicle by jacking on locations other than those indicated in the Jacking Instructions for this vehicle.

1. Remove the spare tire, jack, and lug wrench.
2. If equipped with aluminum wheels where the center cap covers the lug nuts, use the lug wrench to pry the center cap off carefully before raising the vehicle.
3. Before raising the vehicle, use the lug wrench to loosen, but not remove, the lug nuts on the wheel with the flat tire. Turn the lug nuts counterclockwise one turn while the wheel is still on the ground.

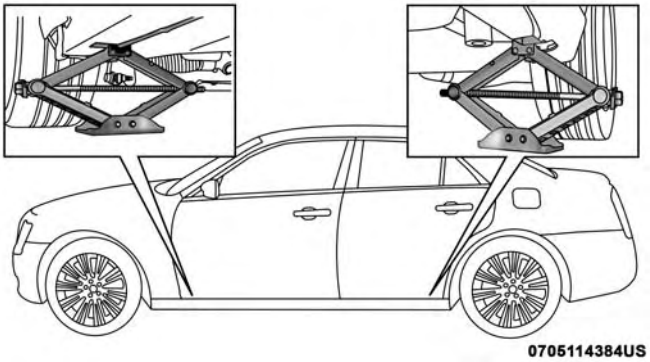

Jacking Locations

4. Place the jack underneath the lift area that is closest to the flat tire. Turn the jack screw clockwise to firmly engage the jack saddle with the lift area of the sill flange.

NOTE: If the vehicle is too low for jack placement, slide the jack on its side and rotate it up into position.

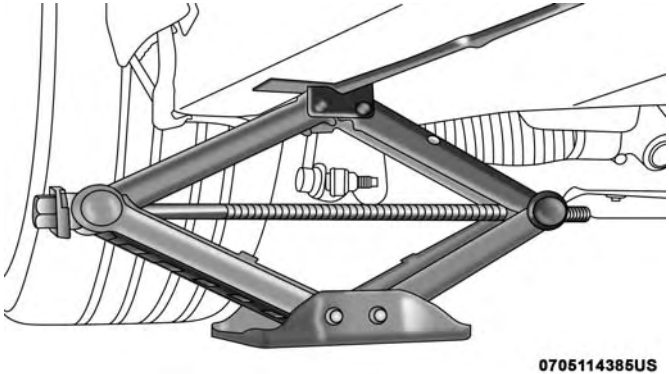

Front Jacking Location

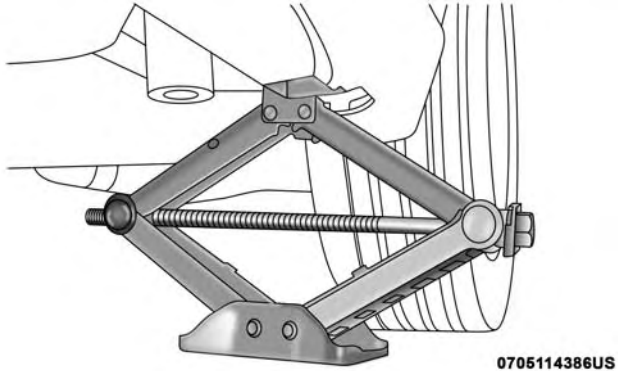

Rear Jacking Location

5. Raise the vehicle just enough to remove the flat tire and install the spare tire.

WARNING!
Raising the vehicle higher than necessary can make the vehicle less stable. It could slip off the jack and hurt someone near it. Raise the vehicle only enough to remove the tire.

6. Remove the lug nuts and tire.

7. Mount the spare tire.

CAUTION!

Be sure to mount the spare tire with the valve stem facing outward. The vehicle could be damaged if the spare tire is mounted incorrectly.

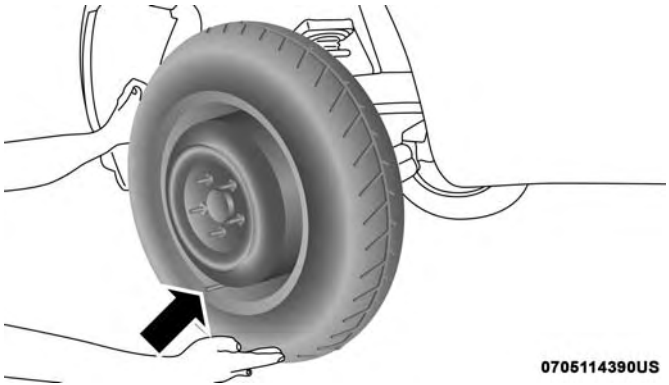

Mounting Spare Tire

NOTE:

- For vehicles so equipped, do not attempt to install a center cap or wheel cover on the compact spare.
- Refer to "Compact Spare Tire" and to "Limited-Use Spare" under "Tires—General Information" in "Servicing And Maintenance" for additional warnings, cautions, and information about the spare tire, its use, and operation.

8. Install the lug nuts with the cone shaped end of the lug nut toward the wheel. Lightly tighten the lug nuts.

WARNING!

To avoid the risk of forcing the vehicle off the jack, do not tighten the wheel nuts fully until the vehicle has been lowered. Failure to follow this warning may result in serious injury.

9. Lower the vehicle to the ground by turning the jack handle counterclockwise.

10. Finish tightening the lug nuts. Push down on the wrench while at the end of the handle for increased leverage. Tighten the lug nuts in a star pattern until each nut has been tightened twice. For the correct lug nut torque, refer to "Torque Specifications" in "Technical Specifications". If in doubt about the correct tightness, have them checked with a torque wrench by your authorized dealer or at a service station.

11. Stow the jack, tools and flat tire. Make sure the base of the jack faces the front of the vehicle before tightening down the fastener.

WARNING!

A loose tire or jack thrown forward in a collision or hard stop could endanger the occupants of the vehicle. Always stow the jack parts and the spare tire in the places provided. Have the deflated (flat) tire repaired or replaced immediately.

Road Tire Installation

1. Mount the road tire on the axle.

2. Install the remaining lug nuts with the cone shaped end of the nut toward the wheel. Lightly tighten the lug nuts.

WARNING!

To avoid the risk of forcing the vehicle off the jack, do not tighten the wheel nuts fully until the vehicle has been lowered. Failure to follow this warning may result in serious injury.

3. Lower the vehicle to the ground by turning the jack handle counterclockwise.

4. Refer to "Torque Specifications" in "Technical Specifications" for proper lug nut torque.

5. After 25 miles (40 km), check the lug nut torque with a torque wrench to ensure that all lug nuts are properly seated against the wheel.

JUMP STARTING

If your vehicle has a discharged battery, it can be jump started using a set of jumper cables and a battery in another vehicle, or by using a portable battery booster pack. Jump starting can be dangerous if done improperly, so please follow the procedures in this section carefully.

WARNING!

Do not attempt jump starting if the battery is frozen. It could rupture or explode and cause personal injury.

CAUTION!

Do not use a portable battery booster pack or any other booster source with a system voltage greater than 12 Volts or damage to the battery, starter motor, alternator or electrical system may occur.

NOTE: When using a portable battery booster pack, follow the manufacturer's operating instructions and precautions.

Preparations For Jump Start

The battery is stored under an access cover in the trunk. Remote battery posts are located on the right side of the engine compartment for jump starting.

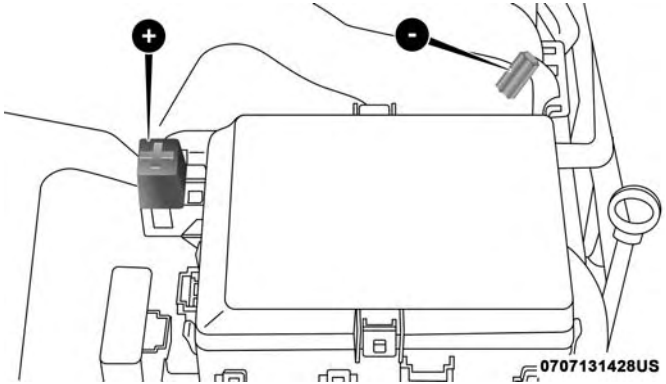

Jump Starting Locations

(+) — Remote Positive Post
(-) — Remote Negative Post

WARNING!

- **Take care to avoid the radiator cooling fan whenever the hood is raised. It can start anytime the ignition switch is ON. You can be injured by moving fan blades.**

(Continued)

WARNING! *(Continued)*

- **Remove any metal jewelry such as rings, watch bands and bracelets that could make an inadvertent electrical contact. You could be seriously injured.**
- **Batteries contain sulfuric acid that can burn your skin or eyes and generate hydrogen gas which is flammable and explosive. Keep open flames or sparks away from the battery.**

1. Apply the parking brake, shift the automatic transmission into PARK and cycle the ignition to OFF.
2. Turn off the heater, radio, and all unnecessary electrical accessories.
3. If using another vehicle to jump start the battery, park the vehicle within the jumper cables' reach, set the parking brake and make sure the ignition is OFF.

WARNING!

Do not allow vehicles to touch each other as this could establish a ground connection and personal injury could result.

Jump Starting Procedure

WARNING!

Failure to follow this jump starting procedure could result in personal injury or property damage due to battery explosion.

CAUTION!

Failure to follow these procedures could result in damage to the charging system of the booster vehicle or the discharged vehicle.

NOTE: Make sure at all times that unused ends of jumper cables are not contacting each other or either vehicle while making connections.

Connecting The Jumper Cables

1. Connect the positive **(+)** end of the jumper cable to the remote positive **(+)** post of the discharged vehicle.
2. Connect the opposite end of the positive **(+)** jumper cable to the positive **(+)** post of the booster battery.
3. Connect the negative end **(-)** of the jumper cable to the negative **(-)** post of the booster battery.

4. Connect the opposite end of the negative **(-)** jumper cable to the remote negative **(-)** post of the vehicle with the discharged battery.

WARNING!

Do not connect the jumper cable to the negative (-) post of the discharged battery. The resulting electrical spark could cause the battery to explode and could result in personal injury. Only use the specific ground point, do not use any other exposed metal parts.

5. Start the engine in the vehicle that has the booster battery, let the engine idle a few minutes, and then start the engine in the vehicle with the discharged battery.

CAUTION!

Do not run the booster vehicle engine above 2,000 rpm since it provides no charging benefit, wastes fuel, and can damage booster vehicle engine.

6. Once the engine is started, remove the jumper cables in the reverse sequence:

Disconnecting The Jumper Cables

1. Disconnect the negative **(-)** end of the jumper cable from the remote negative **(-)** post of the discharged vehicle.
2. Disconnect the opposite end of the negative **(-)** jumper cable from the negative **(-)** post of the booster battery.
3. Disconnect the positive **(+)** end of the jumper cable from the positive **(+)** post of the booster battery.
4. Disconnect the opposite end of the positive **(+)** jumper cable from the remote positive **(+)** post of the discharged vehicle.
5. Reinstall the protective cover over the remote positive **(+)** post of the discharged vehicle.

If frequent jump starting is required to start your vehicle you should have the battery and charging system tested at an authorized dealer.

CAUTION!

Accessories plugged into the vehicle power outlets draw power from the vehicle's battery, even when not in use (i.e., cellular devices, etc.). Eventually, if plugged in long enough without engine operation, the vehicle's battery will discharge sufficiently to degrade battery life and/or prevent the engine from starting.

IF YOUR ENGINE OVERHEATS

In any of the following situations, you can reduce the potential for overheating by taking the appropriate action.

- On the highways — slow down.
- In city traffic — while stopped, place the transmission in NEUTRAL, but do not increase the engine idle speed while preventing vehicle motion with the brakes.

NOTE: There are steps that you can take to slow down an impending overheat condition:

- If your air conditioner (A/C) is on, turn it off. The A/C system adds heat to the engine cooling system and turning the A/C off can help remove this heat.
- You can also turn the temperature control to maximum heat, the mode control to floor and the blower control to high. This allows the heater core to act as a supplement to the radiator and aids in removing heat from the engine cooling system.

WARNING!

You or others can be badly burned by hot engine coolant (antifreeze) or steam from your radiator. If you see or hear steam coming from under the hood, do not open the hood until the radiator has had time to cool. Never try to open a cooling system pressure cap when the radiator or coolant bottle is hot.

CAUTION!

Driving with a hot cooling system could damage your vehicle. If the temperature gauge reads HOT (H), pull over and stop the vehicle. Idle the vehicle with the air conditioner turned off until the pointer drops back into the normal range. If the pointer remains on HOT (H), and you hear continuous chimes, turn the engine off immediately and call for service.

MANUAL PARK RELEASE

WARNING!

Always secure your vehicle by fully applying the parking brake before activating the Manual Park Release. In addition, you should be seated in the driver's seat with your foot firmly on the brake pedal when activating the Manual Park Release. Activating the Manual Park Release will allow your vehicle to roll away if it is not secured by the parking brake, or by proper connection to a tow vehicle. Activating the Manual Park Release on an unsecured vehicle could lead to serious injury or death for those in or around the vehicle.

In order to move the vehicle in cases where the transmission will not shift out of PARK (such as a dead battery), a Manual Park Release is available.

Follow these steps to use the Manual Park Release:

1. Firmly apply the parking brake.
2. Remove the console storage bin to access the Manual Park Release lever.

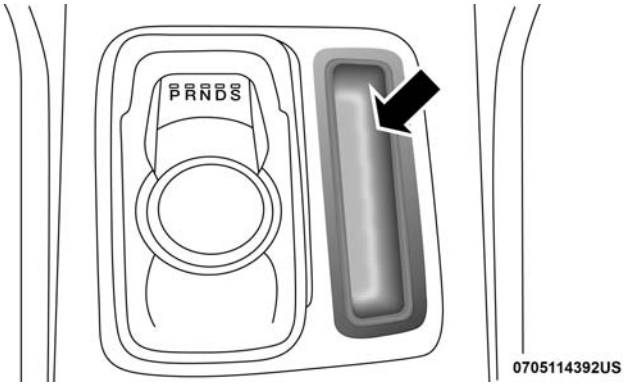

Manual Park Release Lever Location

3. Using a small screwdriver or similar tool, fish the tether strap up through the opening in the console base.
4. Press and maintain firm pressure on the brake pedal.

5. Insert the screwdriver into the slot in the center of the lever, and disengage the lever locking tab by pushing it to the right.

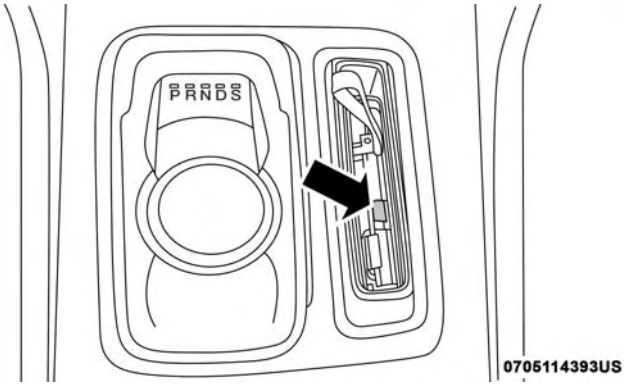

Locking Tab Location

6. While holding the locking tab in the disengaged position, pull the tether strap to rotate the lever up and rearward, until it locks in place in the vertical position. The vehicle is now out of PARK and can be moved. Release the parking brake only when the vehicle is securely connected to a tow vehicle.

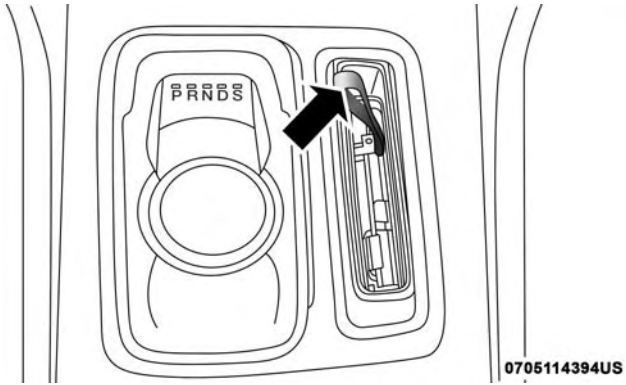

Tether Strap Location

To Reset The Manual Park Release:

1. Push the latch (at the base of the lever, on the rear side) rearward (away from the lever) to unlatch the lever.
2. Rotate the Manual Park Release lever forward and down, to its original position, until the locking tab snaps into place to secure the lever.
3. Pull up gently on the tether strap to confirm that the lever is locked in its stowed position.
4. Tuck the tether strap into the base of the console. Reinstall the console storage bin.

FREEING A STUCK VEHICLE

If your vehicle becomes stuck in mud, sand, or snow, it can often be moved using a rocking motion. Turn the steering wheel right and left to clear the area around the front wheels. Then, shift back and forth between DRIVE and REVERSE while gently pressing the accelerator. Use the least amount of accelerator pedal pressure that will maintain the rocking motion, without spinning the wheels or racing the engine.

NOTE:

- Shifts between DRIVE and REVERSE can only be achieved at wheel speeds of 5 mph (8 km/h) or less. Whenever the transmission remains in NEUTRAL for more than two seconds, you must press the brake pedal to engage DRIVE or REVERSE.
- Push the "ESC Off" switch, to place the Electronic Stability Control (ESC) system in "Partial Off" mode, before rocking the vehicle. Refer to "Electronic Brake Control System" in "Safety" for further information. Once the vehicle has been freed, push the "ESC Off" switch again to restore "ESC On" mode.

WARNING!

Fast spinning tires can be dangerous. Forces generated by excessive wheel speeds may cause damage, or even failure, of the axle and tires. A tire could explode and injure someone. Do not spin your vehicle's wheels faster than 30 mph (48 km/h) or for longer than 30 seconds continuously without stopping when you are stuck and do not let anyone near a spinning wheel, no matter what the speed.

CAUTION!

- **Racing the engine or spinning the wheels may lead to transmission overheating and failure. Allow the engine to idle with the transmission in NEUTRAL for at least one minute after every five rocking-motion cycles. This will minimize overheating and reduce the risk of transmission failure during prolonged efforts to free a stuck vehicle.**
- **When "rocking" a stuck vehicle by shifting between DRIVE and REVERSE, do not spin the wheels faster than 15 mph (24 km/h), or drivetrain damage may result.**

(Continued)

CAUTION! *(Continued)*

- **Revving the engine or spinning the wheels too fast may lead to transmission overheating and failure. It can also damage the tires. Do not spin the wheels above 30 mph (48 km/h) while in gear (no transmission shifting occurring).**

TOWING A DISABLED VEHICLE

This section describes procedures for towing a disabled vehicle using a commercial towing service.

Towing Condition	Wheels OFF The Ground	RWD MODELS	AWD MODELS
Flat Tow	NONE	**If transmission is operable:** • Transmission in **NEUTRAL** • 30 mph (48 km/h) **max** speed • 30 miles (48 km) **max** distance	**NOT ALLOWED**
Wheel Lift Or Dolly Tow	Front	**NOT RECOMMENDED (but, if used, same limitations as above)**	**NOT ALLOWED**
	Rear	NOT RECOMMENDED	NOT RECOMMENDED, but, if used: • Ignition in ON/RUN mode • Transmission in **NEUTRAL (NOT in PARK)**
Flatbed	**ALL**	**BEST METHOD**	**BEST METHOD**

Proper towing or lifting equipment is required to prevent damage to your vehicle. Use only tow bars and other equipment designed for this purpose, following equipment manufacturer's instructions. Use of safety chains is mandatory. Attach a tow bar or other towing device to main structural members of the vehicle, not to bumpers or associated brackets. State and local laws regarding vehicles under tow must be observed.

If you must use the accessories (wipers, defrosters, etc.) while being towed, the ignition must be in the ON/RUN mode, not the ACC mode.

If the key fob is unavailable, or the vehicle's battery is discharged, refer to "Manual Park Release" in this section for instructions on shifting the transmission out of PARK for towing.

CAUTION!

- **Do not use sling type equipment when towing. Vehicle damage may occur.**
- **When securing the vehicle to a flat bed truck, do not attach to front or rear suspension components. Damage to your vehicle may result from improper towing.**
- **The manufacturer does not recommend towing this vehicle using a tow dolly. Vehicle damage may occur.**

All Wheel Drive (AWD) Models

The manufacturer recommends towing your vehicle with all four wheels OFF the ground using a flatbed.

If the transmission and driveline are operable, AWD models can also be towed with the ignition in the ON/RUN mode, the transmission in NEUTRAL (not in PARK!), and the rear wheels OFF the ground with no limitation on speed or distance. Since the ignition MUST be in the ON/RUN mode to tow in this manner, AWD vehicles must be towed with ALL FOUR wheels OFF the ground (e.g. on a flatbed truck) if the key fob is unavailable.

CAUTION!

- **Towing this vehicle using any other method can cause severe transmission and/or transfer case damage.**
- **Damage from improper towing is not covered under the New Vehicle Limited Warranty.**

Rear-Wheel Drive (RWD) Models

The manufacturer recommends towing your vehicle with all four wheels OFF the ground using a flatbed.

If flatbed equipment is not available, and the transmission is operable, this vehicle may be flat towed (with all four wheels on the ground) under the following conditions:

- The automatic transmission must be in NEUTRAL. Refer to "Manual Park Release" in this section for instructions on shifting the transmission to NEUTRAL when the engine is off.
- The towing speed must not exceed 30 mph (48 km/h).
- The towing distance must not exceed 30 miles (48 km).

If the transmission is not operable, or the vehicle must be towed faster than 30 mph (48 km/h) or farther than 30 miles (48 km), then the only acceptable method of towing is with a flatbed truck.

CAUTION!

Towing this vehicle in violation of the above requirements can cause severe transmission damage. Damage from improper towing is not covered under the New Vehicle Limited Warranty.

ENHANCED ACCIDENT RESPONSE SYSTEM (EARS)

This vehicle is equipped with an Enhanced Accident Response System.

Please refer to “Occupant Restraint Systems” in “Safety” for further information on the Enhanced Accident Response System (EARS) function.

EVENT DATA RECORDER (EDR)

This vehicle is equipped with an Event Data Recorder (EDR). The main purpose of an EDR is to record data that will assist in understanding how a vehicle’s systems performed under certain crash or near crash-like situations, such as an air bag deployment or hitting a road obstacle.

Please refer to “Occupant Restraint Systems” in “Safety” for further information on the Event Data Recorder (EDR).

SERVICING AND MAINTENANCE

CONTENTS

■ SCHEDULED SERVICING 343
- □ Maintenance Plan. 344

■ ENGINE COMPARTMENT 348
- □ 3.6L Engine 348
- □ 5.7L Engine 349
- □ Checking Oil Level 350
- □ Adding Washer Fluid 350
- □ Maintenance-Free Battery 351

■ DEALER SERVICE 352
- □ Engine Oil 353
- □ Engine Oil Filter 355
- □ Engine Air Cleaner Filter 355
- □ Air Conditioner Maintenance 356
- □ Accessory Drive Belt Inspection 358
- □ Body Lubrication 359
- □ Windshield Wiper Blades 360
- □ Exhaust System 362
- □ Cooling System 364
- □ Brake System 369
- □ Automatic Transmission 371
- □ All Wheel Drive (AWD) — If Equipped 372
- □ Rear Axle 372

■ RAISING THE VEHICLE 373

■ TIRES 373
- □ Tire Safety Information 373
- □ Tires — General Information 383
- □ Tire Types 389
- □ Spare Tires — If Equipped 390

- Wheel And Wheel Trim Care 393
- Tire Chains (Traction Devices) 394
- Tire Rotation Recommendations. 395

■ DEPARTMENT OF TRANSPORTATION UNIFORM TIRE QUALITY GRADES 396

- Treadwear 396
- Traction Grades 397
- Temperature Grades 397

■ VEHICLE STORAGE 397

■ BODYWORK 398

- Protection From Atmospheric Agents 398
- Body And Underbody Maintenance 398
- Preserving The Bodywork. 398

■ INTERIORS 400

- Seats And Fabric Parts 400
- Plastic And Coated Parts. 400
- Leather Parts 401
- Glass Surfaces 401

SCHEDULED SERVICING

Your vehicle is equipped with an automatic oil change indicator system. The oil change indicator system will remind you that it is time to take your vehicle in for scheduled maintenance.

Based on engine operation conditions, the oil change indicator message will illuminate. This means that service is required for your vehicle. Operating conditions such as frequent short-trips, trailer tow, extremely hot or cold ambient temperatures, and E85 fuel usage will influence when the "Change Oil" or "Oil Change Required" message is displayed. Severe Operating Conditions can cause the change oil message to illuminate as early as 3,500 miles (5,600 km) since last reset. Have your vehicle serviced as soon as possible, within the next 500 miles (805 km).

The "Oil Change Required" message will be displayed in the instrument cluster and a single chime will sound, indicating that an oil change is necessary.

Your authorized dealer will reset the oil change indicator message after completing the scheduled oil change. If a scheduled oil change is performed by someone other than your authorized dealer, the message can be reset by referring to "Instrument Cluster Display" in "Getting To Know Your Instrument Panel" for further information.

NOTE: Under no circumstances should oil change intervals exceed 10,000 miles (16,000 km), 12 months or 350 hours of engine run time, whichever comes first. The 350 hours of engine run or idle time is generally only a concern for fleet customers.

Severe Duty All Models

Change Engine Oil at 4,000 miles (6,500 km) or 350 hours of engine run time if the vehicle is operated in a dusty and off-road environment, or is operated predominantly at idle or only very low engine RPM's. This type of vehicle use is considered Severe Duty.

Once A Month Or Before A Long Trip:

- Check engine oil level.
- Check windshield washer fluid level.
- Check tire pressure and look for unusual wear or damage. Rotate tires at the first sign of irregular wear, even if it occurs before your next scheduled service.
- Check the fluid levels of the coolant reservoir, brake master cylinder, and power steering (if equipped) and fill as needed.
- Check function of all interior and exterior lights.

Maintenance Plan

Required Maintenance Intervals:

Refer to the maintenance schedules on the following page for the required maintenance intervals.

At Every Oil Change Interval As Indicated By Oil Change Indicator System:
• Change oil and filter
• Rotate the tires **Rotate at the first sign of irregular wear, even if it occurs before your next scheduled service**

At Every Oil Change Interval As Indicated By Oil Change Indicator System:
• Inspect battery and clean and tighten terminals as required
• Inspect brake pads, shoes, rotors, drums, hoses and park brake
• Inspect engine cooling system protection and hoses
• Inspect exhaust system
• Inspect engine air cleaner if using in dusty or off-road conditions

Mileage or time passed (whichever comes first)	20,000	30,000	40,000	50,000	60,000	70,000	80,000	90,000	100,000	110,000	120,000	130,000	140,000	150,000
Or Years:	**2**	**3**	**4**	**5**	**6**	**7**	**8**	**9**	**10**	**11**	**12**	**13**	**14**	**15**
Or Kilometers:	**32,000**	**48,000**	**64,000**	**80,000**	**96,000**	**112,000**	**128,000**	**144,000**	**160,000**	**176,000**	**192,000**	**208,000**	**224,000**	**240,000**
Additional Inspections														
Inspect the CV joints.		X			X			X			X			X
Inspect front suspension, tie rod ends, boot seals, and replace if necessary.	X		X		X		X		X		X		X	
Inspect the rear axle fluid. Inspect the front axle fluid (All Wheel Drive Only).	X		X		X		X		X		X		X	
Inspect the brake linings, replace as necessary.	X		X		X		X		X		X		X	
Adjust park brake on vehicles equipped with four wheel disc brakes.	X		X		X		X		X		X		X	
Inspect transfer case fluid (All Wheel Drive Only).		X			X			X			X			X
Additional Maintenance														
Replace engine air filter.		X			X			X			X			X
Replace cabin/air conditioning filter.	X		X		X		X		X		X		X	
Replace spark plugs. **									X					
Flush and replace the engine coolant at 10 years or 150,000 miles (240,000 km) whichever comes first.									X					X

Mileage or time passed (whichever comes first)	20,000	30,000	40,000	50,000	60,000	70,000	80,000	90,000	100,000	110,000	120,000	130,000	140,000	150,000
Or Years:	2	3	4	5	6	7	8	9	10	11	12	13	14	15
Or Kilometers:	32,000	48,000	64,000	80,000	96,000	112,000	128,000	144,000	160,000	176,000	192,000	208,000	224,000	240,000
Change the transfer case fluid; if using your vehicle for any of the following: police, taxi, fleet, off-road, or frequent trailer towing. (All Wheel Drive Only).					X						X			
Change the rear axle fluid and on models equipped with All Wheel Drive (AWD) change the front axle fluid if using your vehicle for any of the following: police, taxi, fleet, off-road, or frequent trailer towing.				X					X					X
Inspect and replace PCV valve if necessary.									X					

** The spark plug change interval is mileage based only, yearly intervals do not apply.

WARNING!

- **You can be badly injured working on or around a motor vehicle. Do only service work for which you have the knowledge and the right equipment. If you have any doubt about your ability to perform a service job, take your vehicle to a competent mechanic.**
- **Failure to properly inspect and maintain your vehicle could result in a component malfunction and effect vehicle handling and performance. This could cause an accident.**

Heavy Duty Use Of The Vehicle

Change engine oil at 4,000 miles (6,500 km) or 350 hours of engine run time if the vehicle is operated in a dusty and off road environment or is operated predominately at idle or only very low engine RPM's. This type of vehicle use is considered Severe Duty.

ENGINE COMPARTMENT

3.6L Engine

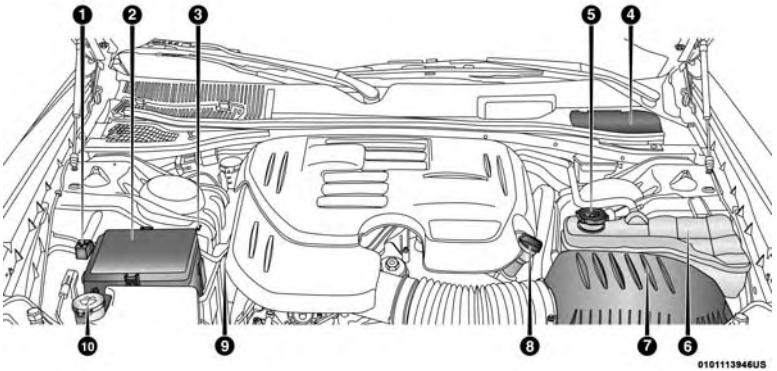

1 — Remote Jump Start (Positive Battery Post)
2 — Power Distribution Center (Fuses)
3 — Remote Jump Start (Negative Battery Post)
4 — Brake Fluid Reservoir Access Cover
5 — Engine Coolant Pressure Cap
6 — Engine Coolant Reservoir
7 — Air Cleaner Filter
8 — Engine Oil Fill
9 — Engine Oil Dipstick
10 — Washer Fluid Reservoir

5.7L Engine

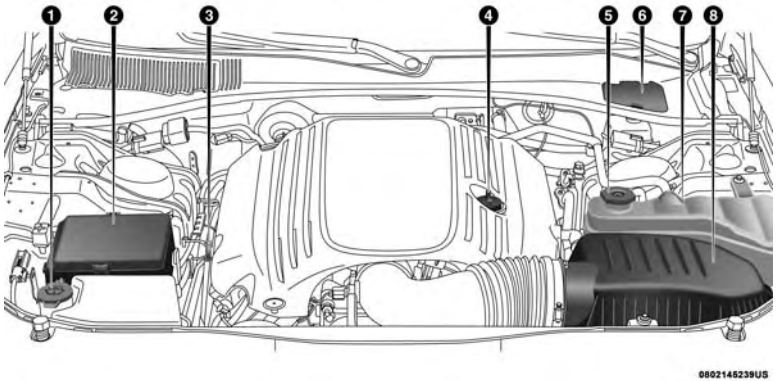

1 — Washer Fluid Reservoir
2 — Power Distribution Center (Fuses)
3 — Engine Oil Dipstick
4 — Engine Oil Fill
5 — Engine Coolant Pressure Cap
6 — Brake Fluid Reservoir Access Cover
7 — Engine Coolant Reservoir
8 — Air Cleaner Filter

Checking Oil Level

To assure proper engine lubrication, the engine oil must be maintained at the correct level. Check the oil level at regular intervals, such as every month. The best time to check the engine oil level is about five minutes after a fully warmed up engine is shut off.

Checking the oil while the vehicle is on level ground will improve the accuracy of the oil level readings.

There are three possible dipstick types,

- Crosshatched zone.
- Crosshatched zone marked SAFE.
- Crosshatched zone marked with MIN at the low end of the range and MAX at the high end of the range.

NOTE: Always maintain the oil level within the crosshatch markings on the dipstick.

Adding 1 quart (1.0 liters) of oil when the reading is at the low end of the dipstick range will raise the oil level to the high end of the range marking.

CAUTION!

Overfilling or underfilling the crankcase will cause aeration or loss of oil pressure. This could damage your engine.

Adding Washer Fluid

The windshield washer fluid reservoir is located in the front of the engine compartment. Be sure to check the fluid level at regular intervals. Fill the reservoir with windshield washer solvent (not radiator antifreeze) and operate the system for a few seconds to flush out the residual water.

When refilling the washer fluid reservoir, apply some washer fluid to a cloth or towel and wipe the wiper blades clean. This will help blade performance.

To prevent freeze-up of your windshield washer system in cold weather, select a solution or mixture that meets or exceeds the temperature range of your climate. This rating information can be found on most washer fluid containers.

The fluid reservoir will hold nearly 1 gallon (4 liters) of washer fluid when the message “Low Washer Fluid” appears in the instrument cluster.

WARNING!

Commercially available windshield washer solvents are flammable. They could ignite and burn you. Care must be exercised when filling or working around the washer solution.

Maintenance-Free Battery

Your vehicle is equipped with a maintenance-free battery. You will never have to add water, nor is periodic maintenance required.

NOTE: The battery is stored under an access cover in the trunk. Remote battery terminals are located in the engine compartment for jump starting. Refer to "Jump Starting Procedures" in "In Case Of Emergency" for further information.

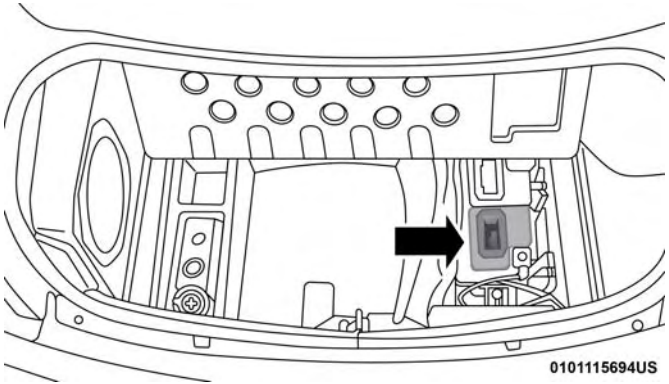

Battery Location

WARNING!

- **Battery fluid is a corrosive acid solution and can burn or even blind you. Do not allow battery fluid to contact your eyes, skin, or clothing. Do not lean over a battery when attaching clamps. If acid splashes in eyes or on skin, flush the area immediately with large amounts of water. Refer to "Jump Starting Procedure" in "In Case Of Emergency" for further information.**

(Continued)

WARNING! *(Continued)*

- **Battery gas is flammable and explosive. Keep flame or sparks away from the battery. Do not use a booster battery or any other booster source with an output greater than 12 Volts. Do not allow cable clamps to touch each other.**
- **Battery posts, terminals, and related accessories contain lead and lead compounds. Wash hands after handling.**
- **The battery in this vehicle has a vent hose that should not be disconnected and should only be replaced with a battery of the same type (vented).**

CAUTION!

- **It is essential when replacing the cables on the battery that the positive cable is attached to the positive post and the negative cable is attached to the negative post. Battery posts are marked positive (+) and negative (-) and are identified on the battery case. Cable clamps should be tight on the terminal posts and free of corrosion.**

(Continued)

CAUTION! *(Continued)*

- **If a "fast charger" is used while the battery is in the vehicle, disconnect both vehicle battery cables before connecting the charger to the battery. Do not use a "fast charger" to provide starting voltage.**

DEALER SERVICE

An authorized dealer has the qualified service personnel, special tools, and equipment to perform all service operations in an expert manner. Service Manuals are available which include detailed service information for your vehicle. Refer to these Service Manuals before attempting any procedure yourself.

NOTE: Intentional tampering with emissions control systems may void your warranty and could result in civil penalties being assessed against you.

WARNING!

You can be badly injured working on or around a motor vehicle. Only do service work for which you have the knowledge and the proper equipment. If you have any doubt about your ability to perform a service job, take your vehicle to a competent mechanic.

Engine Oil

Change Engine Oil — 3.6L And 5.7L Engine

The oil change indicator system will remind you that it is time to take your vehicle in for scheduled maintenance. Refer to "Scheduled Servicing" in this section for the proper maintenance intervals.

NOTE: Under no circumstances should oil change intervals exceed 10,000 miles (16,000 km), 12 months or 350 hours of engine run time, whichever comes first. The 350 hours of engine run or idle time is generally only a concern for fleet customers.

Engine Oil Selection — 3.6L And 5.7L Engine

For best performance and maximum protection under all types of operating conditions, the manufacturer only recommends engine oils that are API Certified and meet the requirements of FCA Material Standard MS-6395.

American Petroleum Institute (API) Engine Oil Identification Symbol

This symbol means that the oil has been certified by the American Petroleum Institute (API). The manufacturer only recommends API Certified engine oils.

This symbol certifies 0W-20, 5W-20, 0W-30, 5W-30 and 10W-30 engine oils.

CAUTION!

Do not use chemical flushes in your engine oil as the chemicals can damage your engine. Such damage is not covered by the New Vehicle Limited Warranty.

Engine Oil Viscosity (SAE Grade) — 3.6L Engine

Mopar SAE 5W-20 engine oil approved to FCA Material Standard MS-6395 such as Pennzoil, Shell Helix Ultra or equivalent is recommended for all operating temperatures. This engine oil improves low temperature starting and vehicle fuel economy.

The engine oil filler cap also shows the recommended engine oil viscosity for your engine. For information on engine oil filler cap location, refer to the "Engine Compartment" illustration in this section.

NOTE: Mopar SAE 5W-30 engine oil approved to FCA Material Standard MS-6395 such as Pennzoil, Shell Helix Ultra or equivalent may be used when SAE 5W-20 engine oil meeting MS-6395 is not available.

Lubricants which do not have both the engine oil certification mark and the correct SAE viscosity grade number should not be used.

Engine Oil Viscosity (SAE Grade) — 5.7L Engine

Mopar SAE 5W-20 engine oil approved to FCA Material Standard MS-6395 such as Pennzoil, Shell Helix Ultra or equivalent is recommended for all operating temperatures. This engine oil improves low temperature starting and vehicle fuel economy.

The engine oil filler cap also shows the recommended engine oil viscosity for your engine. For information on engine oil filler cap location, refer to the "Engine Compartment" illustration in this section.

NOTE: Vehicles equipped with a 5.7L engine must use SAE 5W-20 oil. Failure to do so may result in improper operation of the Fuel Saver Technology. Refer to "Fuel Saver Technology – If Equipped" in "Starting And Operating" for further information.

Lubricants which do not have both the engine oil certification mark and the correct SAE viscosity grade number should not be used.

Synthetic Engine Oils

You may use synthetic engine oils provided the recommended oil quality requirements are met, and the recommended maintenance intervals for oil and filter changes are followed.

Synthetic engine oils which do not have both the engine oil certification mark and the correct SAE viscosity grade number should not be used.

Materials Added To Engine Oil

The manufacturer strongly recommends against the addition of any additives (other than leak detection dyes) to the engine oil. Engine oil is an engineered product and its performance may be impaired by supplemental additives.

Disposing Of Used Engine Oil And Oil Filters

Care should be taken in disposing of used engine oil and oil filters from your vehicle. Used oil and oil filters, indiscriminately discarded, can present a problem to the environment. Contact an authorized dealer, service station or governmental agency for advice on how and where used oil and oil filters can be safely discarded in your area.

Engine Oil Filter

The engine oil filter should be replaced with a new filter at every engine oil change.

Engine Oil Filter Selection

This manufacturer's engines have a full-flow type disposable oil filter. Use a filter of this type for replacement. The quality of replacement filters varies considerably. Only high quality filters should be used to assure most efficient service. Mopar engine oil filters are high quality oil filters and are recommended.

Engine Air Cleaner Filter

Refer to the "Maintenance Plan" in this section for the proper maintenance intervals.

NOTE: Be sure to follow the "Severe Duty Conditions" maintenance interval if applicable.

WARNING!

The air induction system (air cleaner, hoses, etc.) can provide a measure of protection in the case of engine backfire. Do not remove the air induction system (air cleaner, hoses, etc.) unless such removal is necessary for repair or maintenance. Make sure that no one is near the engine compartment before starting the vehicle with the air induction system (air cleaner, hoses, etc.) removed. Failure to do so can result in serious personal injury.

Engine Air Cleaner Filter Selection

The quality of replacement engine air cleaner filters varies considerably. Only high quality filters should be used to assure most efficient service. Mopar engine air cleaner filters are a high quality filter and are recommended.

Air Conditioner Maintenance

For best possible performance, your air conditioner should be checked and serviced by an authorized dealer at the start of each warm season. This service should include cleaning of the condenser fins and a performance test. Drive belt tension should also be checked at this time.

WARNING!

- **Use only refrigerants and compressor lubricants approved by the manufacturer for your air conditioning system. Some unapproved refrigerants are flammable and can explode, injuring you. Other unapproved refrigerants or lubricants can cause the system to fail, requiring costly repairs. Refer to Warranty Information Book, for further warranty information.**
- **The air conditioning system contains refrigerant under high pressure. To avoid risk of personal injury or damage to the system, adding refrigerant or any repair requiring lines to be disconnected should be done by an experienced technician.**

CAUTION!

Do not use chemical flushes in your air conditioning system as the chemicals can damage your air conditioning components. Such damage is not covered by the New Vehicle Limited Warranty.

Refrigerant Recovery And Recycling R-134a — If Equipped

R-134a Air Conditioning Refrigerant is a hydrofluorocarbon (HFC) that is an ozone-friendly substance. The manufacturer recommends that air conditioning service be performed by an authorized dealer or other service facilities using recovery and recycling equipment.

NOTE: Use only manufacturer approved A/C system PAG compressor oil and refrigerants.

Refrigerant Recovery And Recycling — R–1234yf

R–1234yf Air Conditioning Refrigerant is a hydrofluoroolefin (HFO) that is endorsed by the Environmental Protection Agency and is an ozone-friendly substance with a low global-warming potential. The manufacturer recommends that air conditioning service be performed by an authorized dealer using recovery and recycling equipment.

NOTE: Use only manufacturer approved A/C system PAG compressor oil, and refrigerants.

A/C Air Filter

The filter is located in the fresh air inlet under the hood, behind a removable panel in the cowl on the passenger side of the vehicle, next to the windshield wipers. When installing a new filter, ensure its proper orientation.

1. Remove the access door in the cowl screen by pressing the retaining clips.

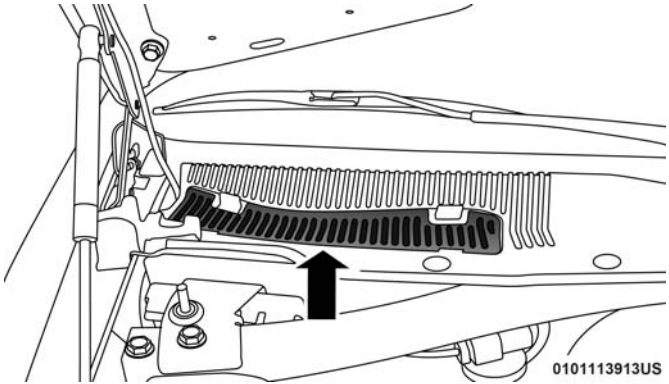

Access Door

2. Unsnap both ends and lift the filter access cover.

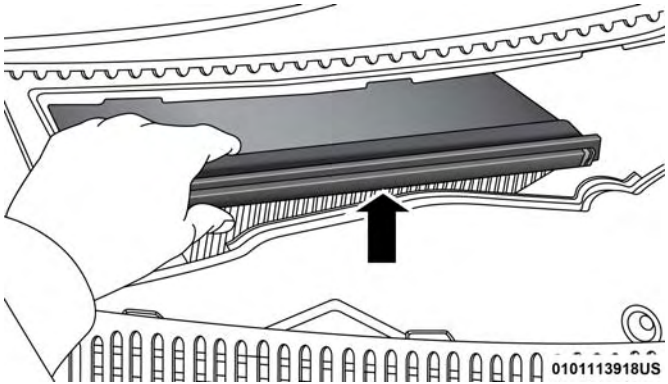

Filter Access Cover

3. Remove the used filter.

4. Install the new filter with arrows pointing in the direction of airflow, which is toward the rear of the vehicle (text and arrows on the filter will indicate this).

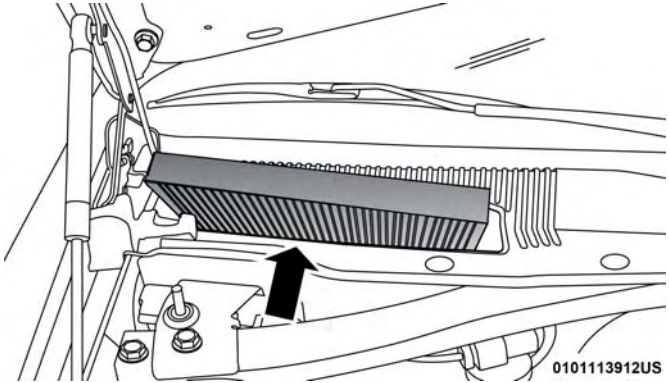

A/C Air Filter

5. Close the filter access cover.

Refer to "Scheduled Servicing" in this section for the proper maintenance intervals.

Accessory Drive Belt Inspection

WARNING!

- **Do not attempt to inspect an accessory drive belt with vehicle running.**
- **When working near the radiator cooling fan, disconnect the fan motor lead. The fan is temperature controlled and can start at any time regardless of ignition mode. You could be injured by the moving fan blades.**
- **You can be badly injured working on or around a motor vehicle. Only do service work for which you have the knowledge and the proper equipment. If you have any doubt about your ability to perform a service job, take your vehicle to a competent mechanic.**

When inspecting accessory drive belts, small cracks that run across ribbed surface of belt from rib to rib, are considered normal. These are not a reason to replace belt. However, cracks running along a rib (not across) are not normal. Any belt with cracks running along a rib must be replaced. Also have the belt replaced if it has excessive wear, frayed cords or severe glazing.

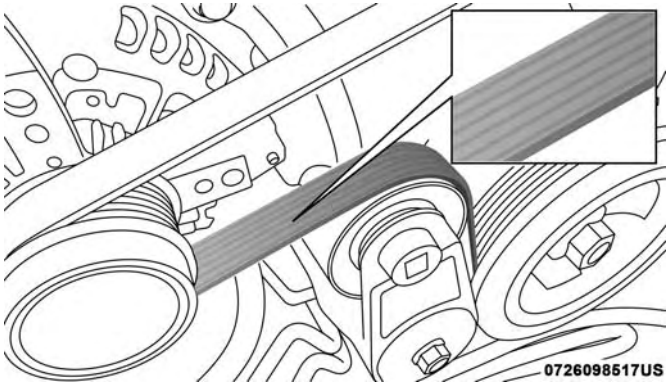

Accessory Belt (Serpentine Belt)

Conditions that would require replacement:

- Rib chunking (one or more ribs has separated from belt body)
- Rib or belt wear
- Longitudinal belt cracking (cracks between two ribs)
- Belt slips
- "Groove jumping" (belt does not maintain correct position on pulley)
- Belt broken (note: identify and correct problem before new belt is installed)
- Noise (objectionable squeal, squeak, or rumble is heard or felt while drive belt is in operation)

Some conditions can be caused by a faulty component such as a belt pulley. Belt pulleys should be carefully inspected for damage and proper alignment.

Belt replacement on some models requires the use of special tools, we recommend having your vehicle serviced at an authorized dealer.

Body Lubrication

Locks and all body pivot points, including such items as seat tracks, door hinge pivot points and rollers, liftgate, tailgate, decklid, sliding doors and hood hinges, should be lubricated periodically with a lithium based grease, such as Mopar Spray White Lube to assure quiet, easy operation and to protect against rust and wear. Prior to the application of any lubricant, the parts concerned should be wiped clean to remove dust and grit; after lubricating excess oil and grease should be removed. Particular attention should also be given to hood latching components to ensure proper function. When performing other underhood services, the hood latch, release mechanism and safety catch should be cleaned and lubricated.

The external lock cylinders should be lubricated twice a year, preferably in the Fall and Spring. Apply a small amount of a high quality lubricant, such as Mopar Lock Cylinder Lubricant directly into the lock cylinder.

Windshield Wiper Blades

Clean the rubber edges of the wiper blades and the windshield periodically with a sponge or soft cloth and a mild nonabrasive cleaner. This will remove accumulations of salt or road film.

Operation of the wipers on dry glass for long periods may cause deterioration of the wiper blades. Always use washer fluid when using the wipers to remove salt or dirt from a dry windshield.

Avoid using the wiper blades to remove frost or ice from the windshield. Keep the blade rubber out of contact with petroleum products such as engine oil, gasoline, etc.

NOTE: Life expectancy of wiper blades varies depending on geographical area and frequency of use. Poor performance of blades may be present with chattering, marks, water lines or wet spots. If any of these conditions are present, clean the wiper blades or replace as necessary.

Wiper Blade Removal/Installation

CAUTION!

Do not allow the wiper arm to spring back against the glass without the wiper blade in place or the glass may be damaged.

1. Lift the wiper arm to raise the wiper blade off of the glass, until the wiper arm is in the full up position.

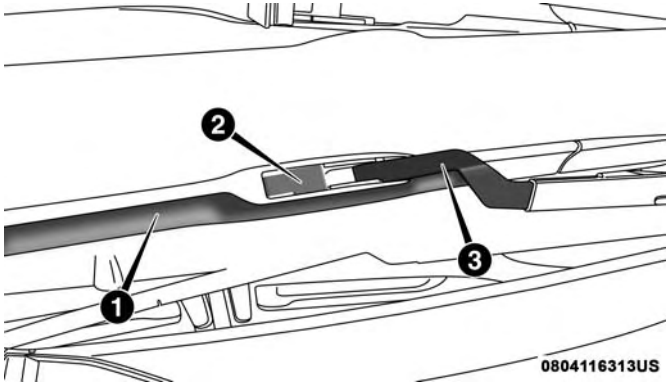

Windshield Wiper Arm

1 — Wiper
2 — Locking Tab
3 — Wiper Arm

2. To disengage the wiper blade from the wiper arm, flip up the locking tab.

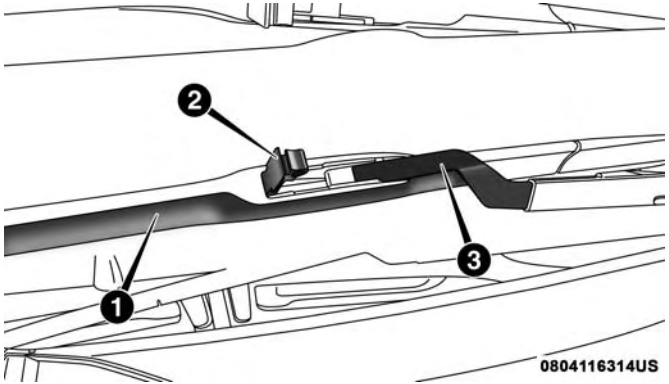

Wiper Locking Assembly

1 — Wiper
2 — Locking Tab
3 — Wiper Arm

3. Slide the wiper blade down towards the base of the wiper arm.

4. With the wiper blade disengaged, remove the wiper blade from the wiper arm by holding the wiper arm with one hand and separating the wiper blade from the wiper arm with the other hand (move the wiper blade down toward the base of the wiper arm and away from the J hook in the end of the wiper arm).

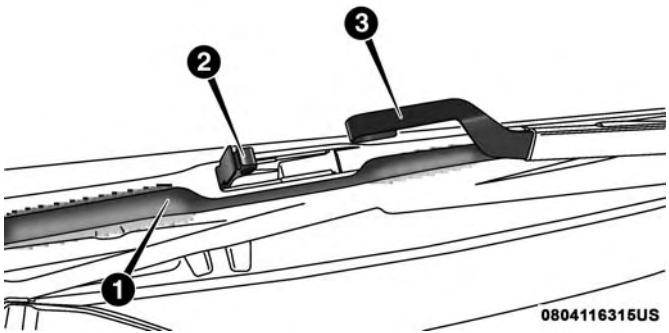

Removing Wiper From Wiper Arm

1 — Wiper
2 — Locking Tab
3 — Wiper Arm J Hook

5. Gently lower the wiper arm onto the glass.

Installing The Front Wipers

1. Lift the wiper arm off of the glass, until the wiper arm is in the full up position.
2. Position the wiper blade under the hook on the tip of the wiper arm with the wiper locking tab open.
3. Insert the receiver bracket on the wiper assembly into the hook on the tip of the arm through the opening in the wiper blade under the locking tab.
4. Slide the wiper blade onto the arm until motion stops, then fold down the locking tab to secure.

NOTE: The locking tab will not snap into place until the blade is properly positioned on the wiper arm hook.

5. Gently lower the wiper blade onto the glass.

Exhaust System

The best protection against carbon monoxide entry into the vehicle body is a properly maintained engine exhaust system.

If you notice a change in the sound of the exhaust system; or if the exhaust fumes can be detected inside the vehicle; or when the underside or rear of the vehicle is damaged;

have an authorized technician inspect the complete exhaust system and adjacent body areas for broken, damaged, deteriorated, or mispositioned parts. Open seams or loose connections could permit exhaust fumes to seep into the passenger compartment. In addition, have the exhaust system inspected each time the vehicle is raised for lubrication or oil change. Replace as required.

WARNING!

- **Exhaust gases can injure or kill. They contain carbon monoxide (CO), which is colorless and odorless. Breathing it can make you unconscious and can eventually poison you. To avoid breathing CO, refer to "Safety Tips" in "Safety" for further information.**
- **A hot exhaust system can start a fire if you park over materials that can burn. Such materials might be grass or leaves coming into contact with your exhaust system. Do not park or operate your vehicle in areas where your exhaust system can contact anything that can burn.**

CAUTION!

- **The catalytic converter requires the use of unleaded fuel only. Leaded gasoline will destroy the effectiveness of the catalyst as an emissions control device and may seriously reduce engine performance and cause serious damage to the engine.**
- **Damage to the catalytic converter can result if your vehicle is not kept in proper operating condition. In the event of engine malfunction, particularly involving engine misfire or other apparent loss of performance, have your vehicle serviced promptly. Continued operation of your vehicle with a severe malfunction could cause the converter to overheat, resulting in possible damage to the converter and vehicle.**

Under normal operating conditions, the catalytic converter will not require maintenance. However, it is important to keep the engine properly tuned to assure proper catalyst operation and prevent possible catalyst damage.

NOTE: Intentional tampering with emissions control systems can result in civil penalties being assessed against you.

In unusual situations involving grossly malfunctioning engine operation, a scorching odor may suggest severe and abnormal catalyst overheating. If this occurs, stop the vehicle, turn off the engine and allow it to cool. Service, including a tune-up to manufacturer's specifications, should be obtained immediately.

To minimize the possibility of catalytic converter damage:

- Do not shut off the engine or interrupt the ignition when the transmission is in gear and the vehicle is in motion.
- Do not try to start the engine by pushing or towing the vehicle.
- Do not idle the engine with any spark plug wires disconnected or removed, such as when diagnostic testing, or for prolonged periods during very rough idle or malfunctioning operating conditions.

NOTE: Your vehicle's exhaust system may be equipped with an Electronic Exhaust Valve (EEV) system, if the exhaust system is replaced with aftermarket products a Malfunction Indicator Lamp (MIL) will illuminate.

Cooling System

WARNING!

- **You or others can be badly burned by hot engine coolant (antifreeze) or steam from your radiator. If you see or hear steam coming from under the hood, do not open the hood until the radiator has had time to cool. Never open a cooling system pressure cap when the radiator or coolant bottle is hot.**
- **Keep hands, tools, clothing, and jewelry away from the radiator cooling fan when the hood is raised. The fan starts automatically and may start at any time, whether the engine is running or not.**
- **When working near the radiator cooling fan, disconnect the fan motor lead or turn the ignition to the OFF mode. The fan is temperature controlled and can start at any time the ignition is in the ON mode.**

Coolant Checks

Check engine coolant (antifreeze) protection every 12 months (before the onset of freezing weather, where applicable). If the engine coolant (antifreeze) is dirty, the system should be drained, flushed, and refilled with fresh OAT coolant (conforming to MS.90032) by an authorized dealer. Check the front of the radiator for any accumulation of bugs, leaves, etc. If dirty, clean by gently spraying water from a garden hose vertically down the face of the condenser.

Check the coolant recovery bottle tubing for brittle rubber, cracking, tears, cuts, and tightness of the connection at the bottle and radiator. Inspect the entire system for leaks. DO NOT REMOVE THE COOLANT PRESSURE CAP WHEN THE COOLING SYSTEM IS HOT.

Cooling System — Drain, Flush And Refill

NOTE: Some vehicles require special tools to add coolant properly. Failure to fill these systems properly could lead to severe internal engine damage. If any coolant is needed to be added to the system please contact an authorized dealer.

If the engine coolant (antifreeze) is dirty or contains visible sediment, have an authorized dealer clean and flush with OAT coolant (antifreeze) (conforming to MS.90032).

Refer to the “Maintenance Plan” in this section for the proper maintenance intervals.

Selection Of Coolant

Refer to “Fluids And Lubricants” in “Technical Specifications” for further information.

NOTE:

- Mixing of engine coolant (antifreeze) other than specified Organic Additive Technology (OAT) engine coolant (antifreeze), may result in engine damage and may decrease corrosion protection. Organic Additive Technology (OAT) engine coolant is different and should not be mixed with Hybrid Organic Additive Technology (HOAT) engine coolant (antifreeze) or any “globally compatible” coolant (antifreeze). If a non-OAT engine coolant (antifreeze) is introduced into the cooling system in an emergency, the cooling system will need to be drained, flushed, and refilled with fresh OAT coolant (conforming to MS.90032), by an authorized dealer as soon as possible.

- Do not use water alone or alcohol-based engine coolant (antifreeze) products. Do not use additional rust inhibitors or antirust products, as they may not be compatible with the radiator engine coolant and may plug the radiator.
- This vehicle has not been designed for use with propylene glycol-based engine coolant (antifreeze). Use of propylene glycolbased engine coolant (antifreeze) is not recommended.
- Some vehicles require special tools to add coolant properly. Failure to fill these systems properly could lead to severe internal engine damage. If any coolant is needed to be added to the system please contact an authorized dealer.

Adding Coolant

Your vehicle has been built with an improved engine coolant (OAT coolant conforming to MS.90032) that allows extended maintenance intervals. This engine coolant (antifreeze) can be used up to ten years or 150,000 miles (240,000 km) before replacement. To prevent reducing this extended maintenance period, it is important that you use the same engine coolant (OAT coolant conforming to MS.90032) throughout the life of your vehicle.

Please review these recommendations for using Organic Additive Technology (OAT) engine coolant (antifreeze) that meets the requirements of FCA Material Standard MS.90032. When adding engine coolant (antifreeze):

- We recommend using Mopar Antifreeze/Coolant 10 Year/150,000 Mile (240,000 km) Formula OAT (Organic Additive Technology) that meets the requirements of FCA Material Standard MS.90032.
- Mix a minimum solution of 50% OAT engine coolant that meets the requirements of FCA Material Standard MS.90032 and distilled water. Use higher concentrations (not to exceed 70%) if temperatures below –34°F (–37°C) are anticipated. Please contact an authorized dealer for assistance.
- Use only high purity water such as distilled or deionized water when mixing the water/engine coolant (antifreeze) solution. The use of lower quality water will reduce the amount of corrosion protection in the engine cooling system.

NOTE:

- It is the owner's responsibility to maintain the proper level of protection against freezing according to the temperatures occurring in the area where the vehicle is operated.
- Some vehicles require special tools to add coolant properly. Failure to fill these systems properly could lead to severe internal engine damage. If any coolant is needed to be added to the system, please contact a local authorized dealer.
- Mixing engine coolant (antifreeze) types is not recommended and can result in cooling system damage. If HOAT and OAT coolant are mixed in an emergency, have a authorized dealer drain, flush, and refill with OAT coolant (conforming to MS.90032) as soon as possible.

Cooling System Pressure Cap

The cap must be fully tightened to prevent loss of engine coolant (antifreeze), and to ensure that engine coolant (antifreeze) will return to the radiator from the coolant expansion bottle/recovery tank if so equipped.

The cap should be inspected and cleaned if there is any accumulation of foreign material on the sealing surfaces.

WARNING!

- **Do not open hot engine cooling system. Never add engine coolant (antifreeze) when the engine is overheated. Do not loosen or remove the cap to cool an overheated engine. Heat causes pressure to build up in the cooling system. To prevent scalding or injury, do not remove the pressure cap while the system is hot or under pressure.**
- **Do not use a pressure cap other than the one specified for your vehicle. Personal injury or engine damage may result.**

Disposal Of Used Coolant

Used ethylene glycol-based coolant (antifreeze) is a regulated substance requiring proper disposal. Check with your local authorities to determine the disposal rules for your community. To prevent ingestion by animals or children, do not store ethylene glycol-based coolant in open containers or allow it to remain in puddles on the ground. If ingested by a child or pet, seek emergency assistance immediately. Clean up any ground spills immediately.

Coolant Level

The coolant bottle provides a quick visual method for determining that the coolant level is adequate. With the engine OFF and cold, the level of the engine coolant (antifreeze) in the bottle should be between the ranges indicated on the bottle.

The radiator normally remains completely full, so there is no need to remove the radiator/coolant pressure cap unless checking for engine coolant (antifreeze) freeze point or replacing coolant. Advise your service attendant of this. As long as the engine operating temperature is satisfactory, the coolant bottle need only be checked once a month.

When additional engine coolant (antifreeze) is needed to maintain the proper level, only OAT coolant that meets the requirements of FCA Material Standard MS.90032 should be added to the coolant bottle. Do not overfill.

Points To Remember

NOTE: When the vehicle is stopped after a few miles/kilometers of operation, you may observe vapor coming from the front of the engine compartment. This is normally a result of moisture from rain, snow, or high humidity accumulating on the radiator and being vaporized when the thermostat opens, allowing hot engine coolant (antifreeze) to enter the radiator.

If an examination of your engine compartment shows no evidence of radiator or hose leaks, the vehicle may be safely driven. The vapor will soon dissipate.

- Do not overfill the coolant expansion bottle.
- Check the coolant freeze point in the radiator and in the coolant expansion bottle. If engine coolant (antifreeze) needs to be added, the contents of the coolant expansion bottle must also be protected against freezing.
- If frequent engine coolant (antifreeze) additions are required, the cooling system should be pressure tested for leaks.

- Maintain engine coolant (antifreeze) concentration at a minimum of 50% OAT coolant (conforming to MS.90032) and distilled water for proper corrosion protection of your engine which contains aluminum components.
- Make sure that the coolant expansion bottle overflow hoses are not kinked or obstructed.
- Keep the front of the radiator clean. If your vehicle is equipped with air conditioning, keep the front of the condenser clean.
- Do not change the thermostat for Summer or Winter operation. If replacement is ever necessary, install ONLY the correct type thermostat. Other designs may result in unsatisfactory engine coolant (antifreeze) performance, poor gas mileage, and increased emissions.

Brake System

In order to assure brake system performance, all brake system components should be inspected periodically. Refer to the "Maintenance Plan" in this section for the proper maintenance intervals.

WARNING!

Riding the brakes can lead to brake failure and possibly a collision. Driving with your foot resting or riding on the brake pedal can result in abnormally high brake temperatures, excessive lining wear, and possible brake damage. You would not have your full braking capacity in an emergency.

Fluid Level Check — Brake Master Cylinder

Check the fluid level in the master cylinder immediately if the brake system warning light indicates system failure.

Check the fluid level in the master cylinder when performing underhood services.

Clean the top of the master cylinder area before removing the cap. Add fluid to bring the level up to the top of the "FULL" mark on the side of the master cylinder reservoir.

Overfilling of fluid is not recommended because it may cause leaking in the system.

Add enough fluid to bring the level up to the requirements described on the brake fluid reservoir. With disc brakes, fluid level can be expected to fall as the brake pads wear. However, low fluid level may be caused by a leak and a checkup may be needed.

Use only brake fluid that has been recommended by the manufacturer, and has been kept in a tightly closed container to avoid contamination from foreign matter or moisture.

Refer to "Fluids And Lubricants" in "Technical Specifications" for further information.

WARNING!

- **Use only manufacturer's recommended brake fluid. Refer to "Fluids And Lubricants" in "Technical Specifications" for further information. Using the wrong type of brake fluid can severely damage your brake system and/or impair its performance. The proper type of brake fluid for your vehicle is also identified on the original factory installed hydraulic master cylinder reservoir.**

(Continued)

WARNING! ***(Continued)***

- **To avoid contamination from foreign matter or moisture, use only new brake fluid or fluid that has been in a tightly closed container. Keep the master cylinder reservoir cap secured at all times. Brake fluid in a open container absorbs moisture from the air resulting in a lower boiling point. This may cause it to boil unexpectedly during hard or prolonged braking, resulting in sudden brake failure. This could result in a collision.**
- **Overfilling the brake fluid reservoir can result in spilling brake fluid on hot engine parts, causing the brake fluid to catch fire. Brake fluid can also damage painted and vinyl surfaces, care should be taken to avoid its contact with these surfaces.**
- **Do not allow petroleum based fluid to contaminate the brake fluid. Brake seal components could be damaged, causing partial or complete brake failure. This could result in a collision.**

Automatic Transmission

Selection Of Lubricant

It is important to use the proper transmission fluid to ensure optimum transmission performance and life. Use only the manufacturer's specified transmission fluid. Refer to "Fluids And Lubricants" in "Technical Specifications" for fluid specifications. It is important to maintain the transmission fluid at the correct level using the recommended fluid.

NOTE: No chemical flushes should be used in any transmission; only the approved lubricant should be used.

CAUTION!

Using a transmission fluid other than the manufacturer's recommended fluid may cause deterioration in transmission shift quality and/or torque converter shudder. Refer to "Fluids And Lubricants" in "Technical Specifications" for fluid specifications.

Special Additives

The manufacturer strongly recommends against using any special additives in the transmission. Automatic Transmission Fluid (ATF) is an engineered product and its performance may be impaired by supplemental additives. Therefore, do not add any fluid additives to the transmission. Avoid using transmission sealers as they may adversely affect seals.

CAUTION!

Do not use chemical flushes in your transmission as the chemicals can damage your transmission components. Such damage is not covered by the New Vehicle Limited Warranty.

Fluid Level Check

The fluid level is preset at the factory and does not require adjustment under normal operating conditions. Routine fluid level checks are not required; therefore the transmission has no dipstick. An authorized dealer can check your transmission fluid level using special service tools. If you notice fluid leakage or transmission malfunction, visit an authorized dealer immediately to have the transmission fluid level checked. Operating the vehicle with an improper fluid level can cause severe transmission damage.

CAUTION!

If a transmission fluid leak occurs, visit an authorized dealer immediately. Severe transmission damage may occur. An authorized dealer has the proper tools to adjust the fluid level accurately.

Fluid And Filter Changes

Under normal operating conditions, the fluid installed at the factory will provide satisfactory lubrication for the life of the vehicle.

Routine fluid and filter changes are not required. However, change the fluid and filter if the fluid becomes contaminated (with water, etc.), or if the transmission is disassembled for any reason.

All Wheel Drive (AWD) — If Equipped

The all wheel drive system consists of a transfer case and front differential. The exterior surface of these components should be inspected for evidence of fluid leaks. Confirmed leaks should be repaired as soon as possible.

The transfer case fluid fill/inspection plug is located in the middle of the rear housing. To inspect the transfer case fluid level, remove the fill/inspection plug. The fluid level should be even with the bottom of the hole. Use this plug to add fluid as required.

The front differential fill plug is located on the outer cover near the halfshaft attachment. To inspect the differential fluid level, remove the fill plug. The fluid level should be even with or slightly below the bottom of the hole.

Fluid Changes

Refer to “Scheduled Servicing” in “Servicing And Maintenance” for the proper maintenance intervals.

Rear Axle

For normal service, periodic fluid level checks are not required. When the vehicle is serviced for other reasons the exterior surfaces of the axle assembly should be inspected. If gear oil leakage is suspected inspect the fluid level. Refer to “Fluids And Lubricants” in “Technical Specifications” for further information.

RAISING THE VEHICLE

In the case where it is necessary to raise the vehicle, go to an authorized dealer or service station.

TIRES

Tire Safety Information

Tire safety information will cover aspects of the following information: Tire Markings, Tire Identification Numbers, Tire Terminology and Definitions, Tire Pressures, and Tire Loading.

Tire Markings

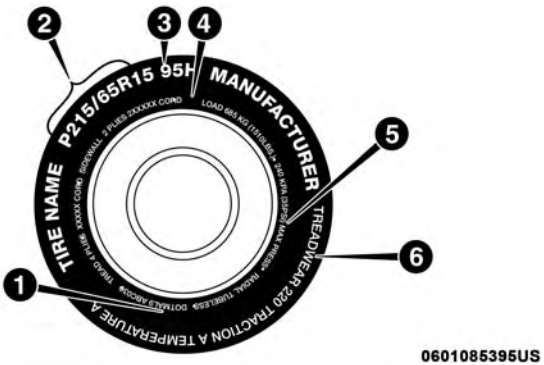

Tire Markings

1 — U.S. DOT Safety Standards Code (TIN)	4 — Maximum Load
2 — Size Designation	5 — Maximum Pressure
3 — Service Description	6 — Treadwear, Traction and Temperature Grades

NOTE:

- P (Passenger) — Metric tire sizing is based on U.S. design standards. P-Metric tires have the letter "P" molded into the sidewall preceding the size designation. Example: P215/65R15 95H.
- European — Metric tire sizing is based on European design standards. Tires designed to this standard have the tire size molded into the sidewall beginning with the section width. The letter ″P″ is absent from this tire size designation. Example: 215/65R15 96H.
- LT (Light Truck) — Metric tire sizing is based on U.S. design standards. The size designation for LT-Metric tires is the same as for P-Metric tires except for the letters "LT" that are molded into the sidewall preceding the size designation. Example: LT235/85R16.
- Temporary spare tires are designed for temporary emergency use only. Temporary high pressure compact spare tires have the letter "T" or "S" molded into the sidewall preceding the size designation. Example: T145/80D18 103M.
- High flotation tire sizing is based on U.S. design standards and it begins with the tire diameter molded into the sidewall. Example: 31x10.5 R15 LT.

Tire Sizing Chart

EXAMPLE:

Example Size Designation: P215/65R15XL 95H, 215/65R15 96H, LT235/85R16C, T145/80D18 103M, 31x10.5 R15 LT
P = Passenger car tire size based on U.S. design standards, or **"....blank...."** = Passenger car tire based on European design standards, or **LT** = Light truck tire based on U.S. design standards, or **T or S** = Temporary spare tire or **31** = Overall diameter in inches (in)
215, 235, 145 = Section width in millimeters (mm)
65, 85, 80 = Aspect ratio in percent (%) – Ratio of section height to section width of tire, or **10.5** = Section width in inches (in)
R = Construction code – "R" means radial construction, or – "D" means diagonal or bias construction
15, 16, 18 = Rim diameter in inches (in)
Service Description:
95 = Load Index – A numerical code associated with the maximum load a tire can carry

EXAMPLE:

H = Speed Symbol
– A symbol indicating the range of speeds at which a tire can carry a load corresponding to its load index under certain operating conditions
– The maximum speed corresponding to the speed symbol should only be achieved under specified operating conditions (i.e., tire pressure, vehicle loading, road conditions, and posted speed limits)

Load Identification:
Absence of the following load identification symbols on the sidewall of the tire indicates a Standard Load (SL) tire:

- **XL** = Extra load (or reinforced) tire, or
- **LL** = Light load tire or
- **C, D, E, F, G** = Load range associated with the maximum load a tire can carry at a specified pressure

Maximum Load – Maximum load indicates the maximum load this tire is designed to carry

Maximum Pressure – Maximum pressure indicates the maximum permissible cold tire inflation pressure for this tire

Tire Identification Number (TIN)

The TIN may be found on one or both sides of the tire; however, the date code may only be on one side. Tires with white sidewalls will have the full TIN, including the date code, located on the white sidewall side of the tire. Look for the TIN on the outboard side of black sidewall tires as mounted on the vehicle. If the TIN is not found on the outboard side, then you will find it on the inboard side of the tire.

EXAMPLE:
DOT MA L9 ABCD 0301
DOT = Department of Transportation – This symbol certifies that the tire is in compliance with the U.S. Department of Transportation tire safety standards and is approved for highway use
MA = Code representing the tire manufacturing location (two digits)
L9 = Code representing the tire size (two digits)
ABCD = Code used by the tire manufacturer (one to four digits)
03 = Number representing the week in which the tire was manufactured (two digits) – 03 means the 3rd week
01 = Number representing the year in which the tire was manufactured (two digits) – 01 means the year 2001 – Prior to July 2000, tire manufacturers were only required to have one number to represent the year in which the tire was manufactured. Example: 031 could represent the 3rd week of 1981 or 1991

Tire Terminology And Definitions

Term	Definition
B-Pillar	The vehicle B-Pillar is the structural member of the body located behind the front door.
Cold Tire Inflation Pressure	Cold tire inflation pressure is defined as the tire pressure after the vehicle has not been driven for at least three hours, or driven less than 1 mile (1.6 km) after sitting for a minimum of three hours. Inflation pressure is measured in units of PSI (pounds per square inch) or kPa (kilopascals).
Maximum Inflation Pressure	The maximum inflation pressure is the maximum permissible cold tire inflation pressure for this tire. The maximum inflation pressure is molded into the sidewall.
Recommended Cold Tire Inflation Pressure	Vehicle manufacturer's recommended cold tire inflation pressure as shown on the tire placard.
Tire Placard	A label permanently attached to the vehicle describing the vehicle's loading capacity, the original equipment tire sizes and the recommended cold tire inflation pressures.

Tire Loading And Tire Pressure

NOTE: The proper cold tire inflation pressure is listed on the driver's side B-Pillar or the rear edge of the driver's side door.

Check the inflation pressure of each tire, including the spare tire (if equipped), at least monthly and inflate to the recommended pressure for your vehicle.

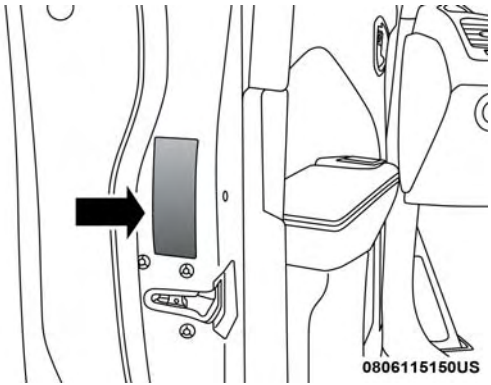

Example Tire Placard Location (Door)

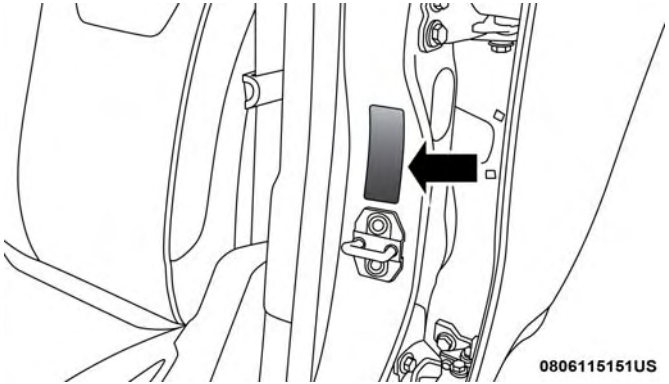

Example Tire Placard Location (B-Pillar)

Tire And Loading Information Placard

Tire And Loading Information Placard

This placard tells you important information about the:

1. Number of people that can be carried in the vehicle.
2. Total weight your vehicle can carry.
3. Tire size designed for your vehicle.
4. Cold tire inflation pressures for the front, rear, and spare tires.

Loading

The vehicle maximum load on the tire must not exceed the load carrying capacity of the tire on your vehicle. You will not exceed the tire's load carrying capacity if you adhere to the loading conditions, tire size, and cold tire inflation pressures specified on the Tire and Loading Information placard in "Vehicle Loading" in the "Starting And Operating" section of this manual.

NOTE: Under a maximum loaded vehicle condition, gross axle weight ratings (GAWRs) for the front and rear axles must not be exceeded.

For further information on GAWRs, vehicle loading, and trailer towing, refer to "Vehicle Loading" in the "Starting And Operating" section of this manual.

To determine the maximum loading conditions of your vehicle, locate the statement "The combined weight of occupants and cargo should never exceed XXX kg or XXX lbs" on the Tire and Loading Information placard. The combined weight of occupants, cargo/luggage and trailer tongue weight (if applicable) should never exceed the weight referenced here.

Steps For Determining Correct Load Limit—

(1) Locate the statement "The combined weight of occupants and cargo should never exceed XXX kg or XXX lbs." on your vehicle's placard.

(2) Determine the combined weight of the driver and passengers that will be riding in your vehicle.

(3) Subtract the combined weight of the driver and passengers from XXX kg or XXX lbs.

(4) The resulting figure equals the available amount of cargo and luggage load capacity. For example, if "XXX" amount equals 1400 lbs. and there will be five 150 lb passengers in your vehicle, the amount of available cargo and luggage load capacity is 650 lbs. (1400-750 (5x150) = 650 lbs.)

(5) Determine the combined weight of luggage and cargo being loaded on the vehicle. That weight may not safely exceed the available cargo and luggage load capacity calculated in Step 4.

(6) If your vehicle will be towing a trailer, load from your trailer will be transferred to your vehicle. Consult this manual to determine how this reduces the available cargo and luggage load capacity of your vehicle.

Metric Example For Load Limit

For example, if "XXX" amount equals 635 kg and there will be five 68 kg passengers in your vehicle, the amount of available cargo and luggage load capacity is 295 kg (635-340 (5x68) = 295 kg) as shown in step 4.

NOTE:

- If your vehicle will be towing a trailer, load from your trailer will be transferred to your vehicle. The following table shows examples on how to calculate total load, cargo/luggage, and towing capacities of your vehicle with varying seating configurations and number and size of occupants. This table is for illustration purposes only and may not be accurate for the seating and load carry capacity of your vehicle.
- For the following example, the combined weight of occupants and cargo should never exceed 865 lbs (392 kg).

Occupants			Combined weight of occupants and cargo from Tire Placard	MINUS	Combined Occupant's weight	=	AVAILABLE Cargo/Luggage and Trailer Tongue Weight
TOTAL	FRONT	REAR					
EXAMPLE 1							
5	2	3			Occupant 1: 200 lbs Occupant 2: 130 lbs Occupant 3: 160 lbs Occupant 4: 100 lbs Occupant 5: 80 lbs TOTAL WEIGHT: 670 lbs		
			865 lbs	minus	670 lbs	=	195 lbs
EXAMPLE 2							
3	2	1			Occupant 1: 210 lbs Occupant 2: 180 lbs Occupant 3: 150 lbs TOTAL WEIGHT: 540 lbs		
			865 lbs	minus	540 lbs	=	325 lbs
EXAMPLE 3							
2	2	0			Occupant 1: 200 lbs Occupant 2: 200 lbs TOTAL WEIGHT: 400 lbs		
			865 lbs	minus	400 lbs	=	465 lbs

EXAMPLE

811a4d11

WARNING!

Overloading of your tires is dangerous. Overloading can cause tire failure, affect vehicle handling, and increase your stopping distance. Use tires of the recommended load capacity for your vehicle. Never overload them.

Tires — General Information

Tire Pressure

Proper tire inflation pressure is essential to the safe and satisfactory operation of your vehicle. Four primary areas are affected by improper tire pressure:

- Safety and Vehicle Stability
- Economy
- Tread Wear
- Ride Comfort

Safety

WARNING!

- **Improperly inflated tires are dangerous and can cause collisions.**
- **Underinflation increases tire flexing and can result in overheating and tire failure.**
- **Overinflation reduces a tire's ability to cushion shock. Objects on the road and chuckholes can cause damage that result in tire failure.**
- **Overinflated or underinflated tires can affect vehicle handling and can fail suddenly, resulting in loss of vehicle control.**
- **Unequal tire pressures can cause steering problems. You could lose control of your vehicle.**
- **Unequal tire pressures from one side of the vehicle to the other can cause the vehicle to drift to the right or left.**
- **Always drive with each tire inflated to the recommended cold tire inflation pressure.**

Both under-inflation and over-inflation affect the stability of the vehicle and can produce a feeling of sluggish response or over responsiveness in the steering.

NOTE:

- Unequal tire pressures from side to side may cause erratic and unpredictable steering response.
- Unequal tire pressure from side to side may cause the vehicle to drift left or right.

Fuel Economy

Underinflated tires will increase tire rolling resistance resulting in higher fuel consumption.

Tread Wear

Improper cold tire inflation pressures can cause abnormal wear patterns and reduced tread life, resulting in the need for earlier tire replacement.

Ride Comfort And Vehicle Stability

Proper tire inflation contributes to a comfortable ride. Over-inflation produces a jarring and uncomfortable ride.

Tire Inflation Pressures

The proper cold tire inflation pressure is listed on the driver's side B-Pillar or rear edge of the driver's side door.

At least once a month:

- Check and adjust tire pressure with a good quality pocket-type pressure gauge. Do not make a visual judgement when determining proper inflation. Tires may look properly inflated even when they are under-inflated.
- Inspect tires for signs of tire wear or visible damage.

CAUTION!

After inspecting or adjusting the tire pressure, always reinstall the valve stem cap. This will prevent moisture and dirt from entering the valve stem, which could damage the valve stem.

Inflation pressures specified on the placard are always "cold tire inflation pressure". Cold tire inflation pressure is defined as the tire pressure after the vehicle has not been driven for at least three hours, or driven less than 1 mile (1.6 km) after sitting for a minimum of three hours. The cold tire inflation pressure must not exceed the maximum inflation pressure molded into the tire sidewall.

Check tire pressures more often if subject to a wide range of outdoor temperatures, as tire pressures vary with temperature changes.

Tire pressures change by approximately 1 psi (7 kPa) per 12°F (7°C) of air temperature change. Keep this in mind when checking tire pressure inside a garage, especially in the Winter.

Example: If garage temperature = 68°F (20°C) and the outside temperature = 32°F (0°C) then the cold tire inflation pressure should be increased by 3 psi (21 kPa), which equals 1 psi (7 kPa) for every 12°F (7°C) for this outside temperature condition.

Tire pressure may increase from 2 to 6 psi (13 to 40 kPa) during operation. DO NOT reduce this normal pressure build up or your tire pressure will be too low.

Tire Pressures For High Speed Operation

The manufacturer advocates driving at safe speeds and within posted speed limits. Where speed limits or conditions are such that the vehicle can be driven at high speeds, maintaining correct tire inflation pressure is very important. Increased tire pressure and reduced vehicle loading may be required for high-speed vehicle operation. Refer to an authorized tire dealer or original equipment vehicle dealer for recommended safe operating speeds, loading and cold tire inflation pressures.

WARNING!

High speed driving with your vehicle under maximum load is dangerous. The added strain on your tires could cause them to fail. You could have a serious collision. Do not drive a vehicle loaded to the maximum capacity at continuous speeds above 75 mph (120 km/h).

Radial Ply Tires

WARNING!

Combining radial ply tires with other types of tires on your vehicle will cause your vehicle to handle poorly. The instability could cause a collision. Always use radial ply tires in sets of four. Never combine them with other types of tires.

Tire Repair

If your tire becomes damaged, it may be repaired if it meets the following criteria:

- The tire has not been driven on when flat.
- The damage is only on the tread section of your tire (sidewall damage is not repairable).

- The puncture is no greater than a ¼ of an inch (6 mm).

Consult an authorized tire dealer for tire repairs and additional information.

Damaged Run Flat tires, or Run Flat tires that have experienced a loss of pressure should be replaced immediately with another Run Flat tire of identical size and service description (Load Index and Speed Symbol). Replace the tire pressure sensor as well as it is not designed to be reused.

Run Flat Tires — If Equipped

Run Flat tires allow you the capability to drive 50 miles (80 km) at 50 mph (80 km/h) after a rapid loss of inflation pressure. This rapid loss of inflation is referred to as the Run Flat mode. A Run Flat mode occurs when the tire inflation pressure is of/or below 14 psi (96 kPa). Once a Run Flat tire reaches the run flat mode it has limited driving capabilities and needs to be replaced immediately. A Run Flat tire is not repairable. When a run flat tire is changed after driving with underinflated tire condition, please replace the TPM sensor as it is not designed to be reused when driven under run flat mode (14 psi (96 kPa)) condition.

NOTE: TPM Sensor must be replaced after driving the vehicle on a flat tire condition.

It is not recommended driving a vehicle loaded at full capacity or to tow a trailer while a tire is in the run flat mode.

See the tire pressure monitoring section for more information.

Tire Spinning

When stuck in mud, sand, snow, or ice conditions, do not spin your vehicle's wheels above 30 mph (48 km/h) or for longer than 30 seconds continuously without stopping.

Refer to "Freeing A Stuck Vehicle" in "In Case Of Emergency" for further information.

WARNING!

Fast spinning tires can be dangerous. Forces generated by excessive wheel speeds may cause tire damage or failure. A tire could explode and injure someone. Do not spin your vehicle's wheels faster than 30 mph (48 km/h) for more than 30 seconds continuously when you are stuck, and do not let anyone near a spinning wheel, no matter what the speed.

Tread Wear Indicators

Tread wear indicators are in the original equipment tires to help you in determining when your tires should be replaced.

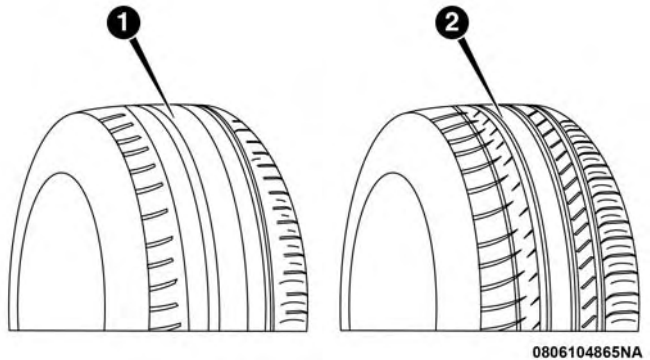

Tire Tread

1 — Worn Tire
2 — New Tire

These indicators are molded into the bottom of the tread grooves. They will appear as bands when the tread depth becomes a 1/16 of an inch (1.6 mm). When the tread is worn to the tread wear indicators, the tire should be replaced.

Refer to "Replacement Tires" in this section for further information.

Life Of Tire

The service life of a tire is dependent upon varying factors including, but not limited to:

- Driving style.
- Tire pressure - Improper cold tire inflation pressures can cause uneven wear patterns to develop across the tire tread. These abnormal wear patterns will reduce tread life, resulting in the need for earlier tire replacement.
- Distance driven.
- Performance tires, tires with a speed rating of V or higher, and Summer tires typically have a reduced tread life. Rotation of these tires per the vehicle scheduled maintenance is highly recommended.

WARNING!

Tires and the spare tire should be replaced after six years, regardless of the remaining tread. Failure to follow this warning can result in sudden tire failure. You could lose control and have a collision resulting in serious injury or death.

NOTE: Wheel Valve Stem must be replaced as well when installing new tires due to wear and tear in existing tires.

Keep dismounted tires in a cool, dry place with as little exposure to light as possible. Protect tires from contact with oil, grease, and gasoline.

Replacement Tires

The tires on your new vehicle provide a balance of many characteristics. They should be inspected regularly for wear and correct cold tire inflation pressures. The manufacturer strongly recommends that you use tires equivalent to the originals in size, quality and performance when replacement is needed. Refer to the paragraph on "Tread Wear Indicators" in this section. Refer to the Tire and Loading Information placard or the Vehicle Certification Label for the size designation of your tire. The Load Index and Speed Symbol for your tire will be found on the original equipment tire sidewall.

See the Tire Sizing Chart example found in the "Tire Safety Information" section of this manual for more information relating to the Load Index and Speed Symbol of a tire.

It is recommended to replace the two front tires or two rear tires as a pair. Replacing just one tire can seriously affect your vehicle's handling. If you ever replace a wheel, make sure that the wheel's specifications match those of the original wheels.

It is recommended you contact an authorized tire dealer or original equipment dealer with any questions you may have on tire specifications or capability. Failure to use equivalent replacement tires may adversely affect the safety, handling, and ride of your vehicle.

WARNING!

- **Do not use a tire, wheel size, load rating, or speed rating other than that specified for your vehicle. Some combinations of unapproved tires and wheels may change suspension dimensions and performance characteristics, resulting in changes to steering, handling, and braking of your vehicle. This can cause unpredictable handling and stress to steering and suspension components. You could lose control and have a collision resulting in serious injury or death. Use only the tire and wheel sizes with load ratings approved for your vehicle.**
- **Never use a tire with a smaller load index or capacity, other than what was originally equipped on your vehicle. Using a tire with a smaller load index could result in tire overloading and failure. You could lose control and have a collision.**
- **Failure to equip your vehicle with tires having adequate speed capability can result in sudden tire failure and loss of vehicle control.**

CAUTION!

Replacing original tires with tires of a different size may result in false speedometer and odometer readings.

Tire Types

All Season Tires — If Equipped

All Season tires provide traction for all seasons (Spring, Summer, Fall, and Winter). Traction levels may vary between different all season tires. All season tires can be identified by the M+S, M&S, M/S or MS designation on the tire sidewall. Use all season tires only in sets of four; failure to do so may adversely affect the safety and handling of your vehicle.

Summer Or Three Season Tires — If Equipped

Summer tires provide traction in both wet and dry conditions, and are not intended to be driven in snow or on ice. If your vehicle is equipped with Summer tires, be aware these tires are not designed for Winter or cold driving conditions. Install Winter tires on your vehicle when ambient temperatures are less than 40°F (5°C) or if roads are covered with ice or snow. For more information, contact an authorized dealer.

Summer tires do not contain the all season designation or mountain/snowflake symbol on the tire sidewall. Use Summer tires only in sets of four; failure to do so may adversely affect the safety and handling of your vehicle.

WARNING!

Do not use Summer tires in snow/ice conditions. You could lose vehicle control, resulting in severe injury or death. Driving too fast for conditions also creates the possibility of loss of vehicle control.

Snow Tires

Some areas of the country require the use of snow tires during the Winter. Snow tires can be identified by a "mountain/snowflake" symbol on the tire sidewall.

If you need snow tires, select tires equivalent in size and type to the original equipment tires. Use snow tires only in sets of four; failure to do so may adversely affect the safety and handling of your vehicle.

Snow tires generally have lower speed ratings than what was originally equipped with your vehicle and should not be operated at sustained speeds over 75 mph (120 km/h). For speeds above 75 mph (120 km/h) refer to original equipment or an authorized tire dealer for recommended safe operating speeds, loading and cold tire inflation pressures.

While studded tires improve performance on ice, skid and traction capability on wet or dry surfaces may be poorer than that of non-studded tires. Some states prohibit studded tires; therefore, local laws should be checked before using these tire types.

Spare Tires — If Equipped

NOTE: For vehicles equipped with Tire Service Kit instead of a spare tire, please refer to "Tire Service Kit" in "In Case Of Emergency" for further information.

CAUTION!

Because of the reduced ground clearance, do not take your vehicle through an automatic car wash with a compact or limited use temporary spare installed. Damage to the vehicle may result.

Refer to the "Towing Requirements - Tires" in "Starting And Operating" for restrictions when towing with a spare tire designated for temporary emergency use.

Spare Tire Matching Original Equipped Tire And Wheel — If Equipped

Your vehicle may be equipped with a spare tire and wheel equivalent in look and function to the original equipment tire and wheel found on the front or rear axle of your vehicle. This spare tire may be used in the tire rotation for your vehicle. If your vehicle has this option, refer to an authorized tire dealer for the recommended tire rotation pattern.

Compact Spare Tire — If Equipped

The compact spare is for temporary emergency use only. You can identify if your vehicle is equipped with a compact spare by looking at the spare tire description on the Tire and Loading Information Placard located on the driver's side door opening or on the sidewall of the tire. Compact spare tire descriptions begin with the letter "T" or "S" preceding the size designation. Example: T145/80D18 103M.

T, S = Temporary Spare Tire

Since this tire has limited tread life, the original equipment tire should be repaired (or replaced) and reinstalled on your vehicle at the first opportunity.

Do not install a wheel cover or attempt to mount a conventional tire on the compact spare wheel, since the wheel is designed specifically for the compact spare tire. Do not install more than one compact spare tire and wheel on the vehicle at any given time.

WARNING!

Compact and collapsible spares are for temporary emergency use only. With these spares, do not drive more than 50 mph (80 km/h). Temporary use spares have limited tread life. When the tread is worn to the tread wear indicators, the temporary use spare tire needs to be replaced. Be sure to follow the warnings, which apply to your spare. Failure to do so could result in spare tire failure and loss of vehicle control.

Collapsible Spare Tire — If Equipped

The collapsible spare is for temporary emergency use only. You can identify if your vehicle is equipped with a collapsible spare by looking at the spare tire description on the Tire and Loading Information Placard located on the driver's side door opening or on the sidewall of the tire.

Collapsible spare tire description example: 165/80-17 101P.

Since this tire has limited tread life, the original equipment tire should be repaired (or replaced) and reinstalled on your vehicle at the first opportunity.

Inflate collapsible tire only after the wheel is properly installed to the vehicle. Inflate the collapsible tire using the electric air pump before lowering the vehicle.

Do not install a wheel cover or attempt to mount a conventional tire on the collapsible spare wheel, since the wheel is designed specifically for the collapsible spare tire.

WARNING!

Compact and Collapsible spares are for temporary emergency use only. With these spares, do not drive more than 50 mph (80 km/h). Temporary use spares have limited tread life. When the tread is worn to the tread wear indicators, the temporary use spare tire needs to be replaced. Be sure to follow the warnings, which apply to your spare. Failure to do so could result in spare tire failure and loss of vehicle control.

Full Size Spare — If Equipped

The full size spare is for temporary emergency use only. This tire may look like the originally equipped tire on the front or rear axle of your vehicle, but it is not. This spare tire may have limited tread life. When the tread is worn to the tread wear indicators, the temporary use full size spare tire needs to be replaced. Since it is not the same as your original equipment tire, replace (or repair) the original equipment tire and reinstall on the vehicle at the first opportunity.

Limited Use Spare — If Equipped

The limited use spare tire is for temporary emergency use only. This tire is identified by a label located on the limited use spare wheel. This label contains the driving limitations for this spare. This tire may look like the original equipped tire on the front or rear axle of your vehicle, but it is not. Installation of this limited use spare tire affects vehicle handling. Since it is not the same as your original equipment tire, replace (or repair) the original equipment tire and reinstall on the vehicle at the first opportunity.

WARNING!

Limited use spares are for emergency use only. Installation of this limited use spare tire affects vehicle handling. With this tire, do not drive more than the speed listed on the limited use spare wheel. Keep inflated to the cold tire inflation pressures listed on your Tire and Loading Information Placard located on the driver's side B-Pillar or the rear edge of the driver's side door. Replace (or repair) the original equipment tire at the first opportunity and reinstall it on your vehicle. Failure to do so could result in loss of vehicle control.

Wheel And Wheel Trim Care

All wheels and wheel trim, especially aluminum and chrome plated wheels, should be cleaned regularly using mild (neutral Ph) soap and water to maintain their luster and to prevent corrosion. Wash wheels with the same soap solution recommended for the body of the vehicle and remember to always wash when the surfaces are not hot to the touch.

Your wheels are susceptible to deterioration caused by salt, sodium chloride, magnesium chloride, calcium chloride, etc., and other road chemicals used to melt ice or control dust on dirt roads. Use a soft cloth or sponge and mild soap to wipe away promptly. Do not use harsh chemicals or a stiff brush. They can damage the wheel's protective coating that helps keep them from corroding and tarnishing.

CAUTION!

Avoid products or automatic car washes that use acidic solutions or strong alkaline additives or harsh brushes. Many aftermarket wheel cleaners and automatic car washes may damage the wheel's protective finish. Such damage is not covered by the New Vehicle Limited Warranty. Only car wash soap, Mopar Wheel Cleaner or equivalent is recommended.

When cleaning extremely dirty wheels including excessive brake dust, care must be taken in the selection of tire and wheel cleaning chemicals and equipment to prevent damage to the wheels. Mopar Wheel Treatment or Mopar Chrome Cleaner or their equivalent is recommended or select a non-abrasive, non-acidic cleaner for aluminum or chrome wheels.

CAUTION!

Do not use scouring pads, steel wool, a bristle brush, metal polishes or oven cleaner. These products may damage the wheel's protective finish. Such damage is not covered by the New Vehicle Limited Warranty. Only car wash soap, Mopar Wheel Cleaner or equivalent is recommended.

NOTE: If you intend parking or storing your vehicle for an extended period after cleaning the wheels with wheel cleaner, drive your vehicle and apply the brakes to remove the water droplets from the brake components. This activity will remove the red rust on the brake rotors and prevent vehicle vibration when braking.

Dark Vapor Chrome, Black Satin Chrome, or Low Gloss Clear Coat Wheels

CAUTION!

If your vehicle is equipped with these specialty wheels, DO NOT USE wheel cleaners, abrasives, or polishing compounds. They will permanently damage this finish and such damage is not covered by the New

(Continued)

CAUTION! *(Continued)*

Vehicle Limited Warranty. HAND WASH ONLY USING MILD SOAP AND WATER WITH A SOFT CLOTH. Used on a regular basis; this is all that is required to maintain this finish.

Tire Chains (Traction Devices)

Use of traction devices require sufficient tire-to-body clearance. Follow these recommendations to guard against damage.

- Traction device must be of proper size for the tire, as recommended by the traction device manufacturer.
- Install on Rear Tires Only.
- Due to limited clearance for a Rear Wheel Drive (RWD) vehicle, on P215/65R17, and P225/60R18 tires with a Peerless Chain Super Z6 low profile traction device or equivalent is recommended.
- Due to limited clearance for an All Wheel Drive (AWD) vehicle, P235/55R19, 235/55R19 tires with the use of a traction device that meets the SAE type "Class S" specification is recommended.

- No other tire sizes are recommended for use with a tire chain or traction device.

WARNING!

Using tires of different size and type (M+S, Snow) between front and rear axles can cause unpredictable handling. You could lose control and have a collision.

CAUTION!

To avoid damage to your vehicle or tires, observe the following precautions:

- **Because of restricted traction device clearance between tires and other suspension components, it is important that only traction devices in good condition are used. Broken devices can cause serious damage. Stop the vehicle immediately if noise occurs that could indicate device breakage. Remove the damaged parts of the device before further use.**
- **Install device as tightly as possible and then retighten after driving about ½ mile (0.8 km).**
- **Do not exceed 30 mph (48 km/h).**

(Continued)

CAUTION! ***(Continued)***

- **Drive cautiously and avoid severe turns and large bumps, especially with a loaded vehicle.**
- **Do not drive for a prolonged period on dry pavement.**
- **Observe the traction device manufacturer's instructions on the method of installation, operating speed, and conditions for use. Always use the suggested operating speed of the device manufacturer's if it is less than 30 mph (48 km/h).**
- **Do not use traction devices on a compact spare tire.**

Tire Rotation Recommendations

Tires on the front and rear axles of vehicles operate at different loads and perform different steering, driving, and braking functions. For these reasons, they wear at unequal rates.

These effects can be reduced by timely rotation of tires. The benefits of rotation are especially worthwhile with aggressive tread designs such as those on all season type tires. Rotation will increase tread life, help to maintain mud, snow and wet traction levels, and contribute to a smooth, quiet ride.

Refer to “Scheduled Servicing” in “Servicing And Maintenance” for the proper maintenance intervals. The reasons for any rapid or unusual wear should be corrected prior to rotation being performed.

The suggested rotation method is the “rearward cross” shown in the following diagram. This rotation pattern does not apply to some directional tires that must not be reversed.

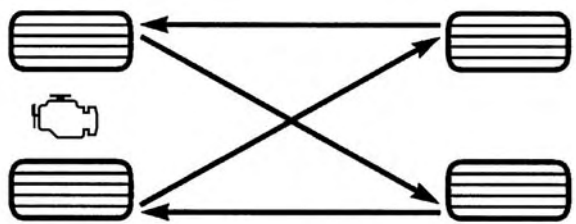

Tire Rotation

DEPARTMENT OF TRANSPORTATION UNIFORM TIRE QUALITY GRADES

The following tire grading categories were established by the National Highway Traffic Safety Administration. The specific grade rating assigned by the tire’s manufacturer in each category is shown on the sidewall of the tires on your vehicle.

All passenger vehicle tires must conform to Federal safety requirements in addition to these grades.

Treadwear

The Treadwear grade is a comparative rating, based on the wear rate of the tire when tested under controlled conditions on a specified government test course. For example, a tire graded 150 would wear one and one-half times as well on the government course as a tire graded 100. The relative performance of tires depends upon the actual conditions of their use, however, and may depart significantly from the norm due to variations in driving habits, service practices, and differences in road characteristics and climate.

Traction Grades

The Traction grades, from highest to lowest, are AA, A, B, and C. These grades represent the tire's ability to stop on wet pavement, as measured under controlled conditions on specified government test surfaces of asphalt and concrete. A tire marked C may have poor traction performance.

WARNING!

The traction grade assigned to this tire is based on straight-ahead braking traction tests, and does not include acceleration, cornering, hydroplaning, or peak traction characteristics.

Temperature Grades

The Temperature grades are A (the highest), B, and C, representing the tire's resistance to the generation of heat and its ability to dissipate heat, when tested under controlled conditions on a specified indoor laboratory test wheel.

Sustained high temperature can cause the material of the tire to degenerate and reduce tire life, and excessive temperature can lead to sudden tire failure. The grade C corresponds to a level of performance, which all passenger vehicle tires must meet under the Federal Motor Vehicle Safety Standard No. 109. Grades B and A represent higher levels of performance on the laboratory test wheel, than the minimum required by law.

WARNING!

The temperature grade for this tire is established for a tire that is properly inflated and not overloaded. Excessive speed, under-inflation, or excessive loading, either separately or in combination, can cause heat buildup and possible tire failure.

VEHICLE STORAGE

If you are leaving your vehicle dormant for more than 21 days, you may want to take these steps to protect your battery.

- Disconnect the negative cable from the battery.
- Anytime you store your vehicle, or keep it out of service (e.g., vacation) for two weeks or more, run the air conditioning system at idle for about five minutes in the fresh air and high blower setting. This will ensure adequate system lubrication to minimize the possibility of compressor damage when the system is started again.

BODYWORK

Protection From Atmospheric Agents

Vehicle body care requirements vary according to geographic locations and usage. Chemicals that make roads passable in snow and ice and those that are sprayed on trees and road surfaces during other seasons are highly corrosive to the metal in your vehicle. Outside parking, which exposes your vehicle to airborne contaminants, road surfaces on which the vehicle is operated, extreme hot or cold weather and other extreme conditions will have an adverse effect on paint, metal trim, and underbody protection.

The following maintenance recommendations will enable you to obtain maximum benefit from the corrosion resistance built into your vehicle.

What Causes Corrosion?

Corrosion is the result of deterioration or removal of paint and protective coatings from your vehicle.

The most common causes are:

- Road salt, dirt and moisture accumulation.
- Stone and gravel impact.
- Insects, tree sap and tar.
- Salt in the air near seacoast localities.
- Atmospheric fallout/industrial pollutants.

Body And Underbody Maintenance

Cleaning Headlights

Your vehicle is equipped with plastic headlights and fog lights that are lighter and less susceptible to stone breakage than glass headlights.

Plastic is not as scratch resistant as glass and therefore different lens cleaning procedures must be followed.

To minimize the possibility of scratching the lenses and reducing light output, avoid wiping with a dry cloth. To remove road dirt, wash with a mild soap solution followed by rinsing.

Do not use abrasive cleaning components, solvents, steel wool or other aggressive material to clean the lenses.

Preserving The Bodywork

Washing

- Wash your vehicle regularly. Always wash your vehicle in the shade using Mopar Car Wash, or a mild car wash soap, and rinse the panels completely with clear water.

- If insects, tar, or other similar deposits have accumulated on your vehicle, use Mopar Super Kleen Bug and Tar Remover to remove.
- Use a high quality cleaner wax, such as Mopar Cleaner Wax to remove road film, stains and to protect your paint finish. Take care never to scratch the paint.
- Avoid using abrasive compounds and power buffing that may diminish the gloss or thin out the paint finish.

CAUTION!

- **Do not use abrasive or strong cleaning materials such as steel wool or scouring powder that will scratch metal and painted surfaces.**
- **Use of power washers exceeding 1,200 psi (8,274 kPa) can result in damage or removal of paint and decals.**

Special Care

- If you drive on salted or dusty roads or if you drive near the ocean, hose off the undercarriage at least once a month.
- It is important that the drain holes in the lower edges of the doors, rocker panels, and trunk be kept clear and open.
- If you detect any stone chips or scratches in the paint, touch them up immediately. The cost of such repairs is considered the responsibility of the owner.
- If your vehicle is damaged due to a collision or similar cause that destroys the paint and protective coating, have your vehicle repaired as soon as possible. The cost of such repairs is considered the responsibility of the owner.
- If you carry special cargo such as chemicals, fertilizers, de-icer salt, etc., be sure that such materials are well packaged and sealed.
- If a lot of driving is done on gravel roads, consider mud or stone shields behind each wheel.
- Use Mopar Touch Up Paint on scratches as soon as possible. An authorized dealer has touch up paint to match the color of your vehicle.

INTERIORS

Seats And Fabric Parts

Use Mopar Total Clean to clean fabric upholstery and carpeting.

WARNING!

Do not use volatile solvents for cleaning purposes. Many are potentially flammable, and if used in closed areas they may cause respiratory harm.

Seat Belt Maintenance

Do not bleach, dye, or clean the belts with chemical solvents or abrasive cleaners. This will weaken the fabric. Sun damage can also weaken the fabric.

If the belts need cleaning, use Mopar Total Clean, a mild soap solution, or lukewarm water. Do not remove the belts from the vehicle to wash them. Dry with a soft cloth.

Replace the belts if they appear frayed or worn or if the buckles do not work properly.

WARNING!

A frayed or torn belt could rip apart in a collision and leave you with no protection. Inspect the belt system periodically, checking for cuts, frays, or loose parts. Damaged parts must be replaced immediately. Do not disassemble or modify the system. Seat belt assemblies must be replaced after a collision if they have been damaged (i.e., bent retractor, torn webbing, etc.).

Plastic And Coated Parts

Use Mopar Total Clean to clean vinyl upholstery.

CAUTION!

- **Direct contact of air fresheners, insect repellents, suntan lotions, or hand sanitizers to the plastic, painted, or decorated surfaces of the interior may cause permanent damage. Wipe away immediately.**
- **Damage caused by these type of products may not be covered by your New Vehicle Limited Warranty.**

Cleaning Plastic Instrument Cluster Lenses

The lenses in front of the instruments in this vehicle are molded in clear plastic. When cleaning the lenses, care must be taken to avoid scratching the plastic.

1. Clean with a wet soft cloth. A mild soap solution may be used, but do not use high alcohol content or abrasive cleaners. If soap is used, wipe clean with a clean damp cloth.
2. Dry with a soft cloth.

Leather Parts

Mopar Total Clean is specifically recommended for leather upholstery.

Your leather upholstery can be best preserved by regular cleaning with a damp soft cloth. Small particles of dirt can act as an abrasive and damage the leather upholstery and should be removed promptly with a damp cloth. Stubborn soils can be removed easily with a soft cloth and Mopar Total Clean. Care should be taken to avoid soaking your leather upholstery with any liquid. Please do not use polishes, oils, cleaning fluids, solvents, detergents, or ammonia-based cleaners to clean your leather upholstery. Application of a leather conditioner is not required to maintain the original condition.

NOTE: If equipped with light colored leather, it tends to show any foreign material, dirt, and fabric dye transfer more so than darker colors. The leather is designed for easy cleaning, and FCA recommends Mopar total care leather cleaner applied on a cloth to clean the leather seats as needed.

CAUTION!

Do not use Alcohol and Alcohol-based and/or Ketone based cleaning products to clean leather upholstery, as damage to the upholstery may result.

Glass Surfaces

All glass surfaces should be cleaned on a regular basis with Mopar Glass Cleaner, or any commercial household-type glass cleaner. Never use an abrasive type cleaner. Use caution when cleaning the inside rear window equipped with electric defrosters or windows equipped with radio antennas. Do not use scrapers or other sharp instruments that may scratch the elements.

When cleaning the rear view mirror, spray cleaner on the towel or cloth that you are using. Do not spray cleaner directly on the mirror.

TECHNICAL SPECIFICATIONS

CONTENTS

■ IDENTIFICATION DATA 405
- □ Vehicle Identification Number 405

■ BRAKE SYSTEM 405

■ WHEEL AND TIRE TORQUE SPECIFICATIONS . .406
- □ Torque Specifications 406

■ FUEL REQUIREMENTS 407
- □ 3.6L Engine 407
- □ 5.7L Engine 408
- □ Reformulated Gasoline 408
- □ Materials Added To Fuel 408
- □ Gasoline/Oxygenate Blends 409
- □ Do Not Use E-85 In Non-Flex Fuel Vehicles 409
- □ CNG And LP Fuel System Modifications 409
- □ MMT In Gasoline 410
- □ Fuel System Cautions 410
- □ Carbon Monoxide Warnings 411

■ FLEXIBLE FUEL (3.6L ENGINE ONLY) 411
- □ E-85 General Information 411
- □ Ethanol Fuel (E-85) 411
- □ Fuel Requirements 412
- □ Selection Of Engine Oil For Flexible Fuel Vehicles (E-85) And Gasoline Vehicles 412
- □ Starting 413
- □ Cruising Range 413
- □ Replacement Parts 413
- □ Maintenance 413

■ FLUID CAPACITIES 414
■ FLUIDS AND LUBRICANTS 415
□ Engine 415
□ Chassis 417

IDENTIFICATION DATA

Vehicle Identification Number

The Vehicle Identification Number (VIN) is on the left front corner of the instrument panel. The VIN is visible from outside of the vehicle through the windshield. This number also appears on the Automobile Information Disclosure Label affixed to a window on your vehicle, the vehicle registration, and the title.

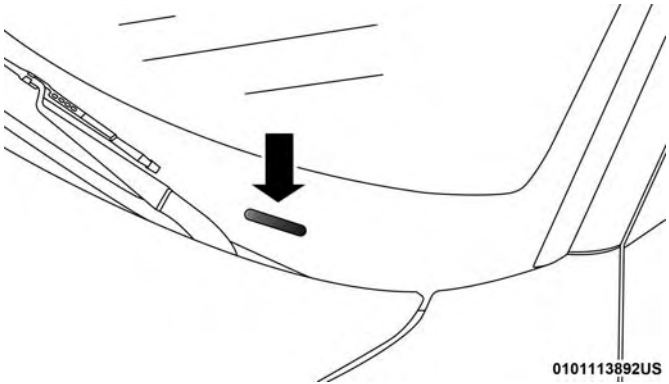

VIN Location

The Vehicle Identification Number (VIN) is also located on the right front strut tower inside the engine compartment.

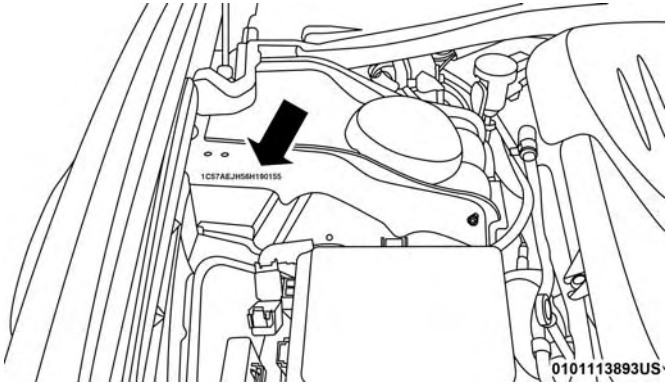

VIN Location

NOTE: It is illegal to remove or alter the VIN.

BRAKE SYSTEM

Your vehicle is equipped with dual hydraulic brake systems. If either of the two hydraulic systems loses normal capability, the remaining system will still function. There will be some loss of overall braking effectiveness. This may be evident by increased pedal travel during application, greater pedal force required to slow or stop, and potential activation of the Brake Warning Light.

In the event power assist is lost for any reason (for example, repeated brake applications with the engine OFF), the brakes will still function. The effort required to brake the vehicle will be much greater than that required with the power system operating.

WHEEL AND TIRE TORQUE SPECIFICATIONS

Proper lug nut/bolt torque is very important to ensure that the wheel is properly mounted to the vehicle. Any time a wheel has been removed and reinstalled on the vehicle, the lug nuts/bolts should be torqued using a properly calibrated torque wrench using a high quality six sided (hex) deep wall socket.

Torque Specifications

Lug Nut/Bolt Torque	**Lug Nut/Bolt Size	Lug Nut/Bolt Socket Size
130 Ft-Lbs (176 N·m)	M14 x 1.50	22 mm

**Use only your authorized dealer recommended lug nuts/bolts and clean or remove any dirt or oil before tightening.

Inspect the wheel mounting surface prior to mounting the tire and remove any corrosion or loose particles.

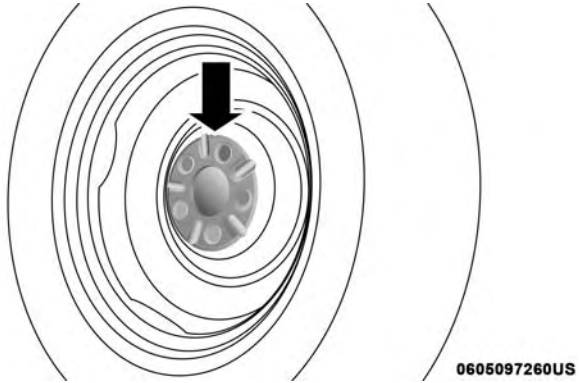

Wheel Mounting Surface

Tighten the lug nuts/bolts in a star pattern until each nut/bolt has been tightened twice. Ensure that the socket is fully engaged on the lug nut/bolt (do not insert it halfway).

NOTE: If in doubt about the correct tightness, have them checked with a torque wrench by your authorized dealer or service station.

After 25 miles (40 km), check the lug nut/bolt torque to be sure that all the lug nuts/bolts are properly seated against the wheel.

0605006372

Torque Patterns

WARNING!

To avoid the risk of forcing the vehicle off the jack, do not tighten the lug nuts/bolts fully until the vehicle has been lowered. Failure to follow this warning may result in personal injury.

FUEL REQUIREMENTS

3.6L Engine

This engine is designed to meet all emissions regulations and provide excellent fuel economy and performance when using high-quality unleaded "Regular" gasoline having an octane rating of 87 as specified by the (R+M)/2 method. The use of higher octane "Premium" gasoline will not provide any benefit over "Regular" gasoline in these engines.

While operating on gasoline with an octane number of 87, hearing a light knocking sound from the engine is not a cause for concern. However, if the engine is heard making a heavy knocking sound, see your dealer immediately. Use of gasoline with an octane number lower than 87 can cause engine failure and may void or not be covered by the New Vehicle Limited Warranty.

Poor quality gasoline can cause problems such as hard starting, stalling, and hesitations. If you experience these symptoms, try another brand of gasoline before considering service for the vehicle.

5.7L Engine

Do not use E-85 flex fuel or ethanol blends greater than 15% in this engine.

This engine is designed to meet all emissions regulations and provide satisfactory fuel economy and performance when using high-quality unleaded gasoline having an octane range of 87 to 89 as specified by the (R+M)/2 method. The use of 89 octane "Plus" gasoline is recommended for optimum performance and fuel economy.

While operating on gasoline with an octane number of 87, hearing a light knocking sound from the engine is not a cause for concern. However, if the engine is heard making a heavy knocking sound, see your dealer immediately. Use of gasoline with an octane number lower than 87 can cause engine failure and may void or not be covered by the New Vehicle Limited Warranty.

Poor quality gasoline can cause problems such as hard starting, stalling, and hesitations. If you experience these symptoms, try another brand of gasoline before considering service for the vehicle.

Reformulated Gasoline

Many areas of the country require the use of cleaner burning gasoline referred to as "Reformulated Gasoline". Reformulated gasoline contains oxygenates and are specifically blended to reduce vehicle emissions and improve air quality.

The use of reformulated gasoline is recommended. Properly blended reformulated gasoline will provide improved performance and durability of engine and fuel system components.

Materials Added To Fuel

Besides using unleaded gasoline with the proper octane rating, gasolines that contain detergents, corrosion and stability additives are recommended. Using gasolines that have these additives will help improve fuel economy, reduce emissions, and maintain vehicle performance.

Designated TOP TIER Detergent Gasoline contains a higher level of detergents to further aide in minimizing engine and fuel system deposits. When available, the usage of TOP TIER Detergent gasoline is recommended. Visit www.toptiergas.com for a list of TOP TIER Detergent Gasoline Retailers.

Indiscriminate use of fuel system cleaning agents should be avoided. Many of these materials intended for gum and varnish removal may contain active solvents or similar ingredients. These can harm fuel system gasket and diaphragm materials.

Gasoline/Oxygenate Blends

Some fuel suppliers blend unleaded gasoline with oxygenates such as ethanol.

CAUTION!

DO NOT use E-85, gasoline containing methanol, or gasoline containing more than 15% ethanol (E-15). Use of these blends may result in starting and drivability problems, damage critical fuel system components, cause emissions to exceed the applicable standard, and/or cause the Malfunction Indicator Light to illuminate. Please observe pump labels as they should clearly communicate if a fuel contains greater than 15% ethanol (E-15).

Problems that result from using gasoline containing more than 15% ethanol (E-15) or gasoline containing methanol are not the responsibility of the manufacturer and may void or not be covered under New Vehicle Limited Warranty.

Do Not Use E-85 In Non-Flex Fuel Vehicles

Non-Flex Fuel Vehicles (FFV) are compatible with gasoline containing up to 15% ethanol (E-15). Use of gasoline with higher ethanol content may void the New Vehicle Limited Warranty.

If a Non-FFV vehicle is inadvertently fueled with E-85 fuel, the engine will have some or all of these symptoms:

- Operate in a lean mode.
- OBD II Malfunction Indicator Light on.
- Poor engine performance.
- Poor cold start and cold drivability.
- Increased risk for fuel system component corrosion.

CNG And LP Fuel System Modifications

Modifications that allow the engine to run on Compressed Natural Gas (CNG) or Liquid Propane (LP) may result in damage to the engine, emissions, and fuel system components. Problems that result from running CNG or LP are not the responsibility of the manufacturer and may void or not be covered under the New Vehicle Limited Warranty.

MMT In Gasoline

Methylcyclopentadienyl Manganese Tricarbonyl (MMT) is a manganese-containing metallic additive that is blended into some gasoline to increase octane. Gasoline blended with MMT provides no performance advantage beyond gasoline of the same octane number without MMT. Gasoline blended with MMT reduces spark plug life and reduces emissions system performance in some vehicles. The manufacturer recommends that gasoline without MMT be used in your vehicle. The MMT content of gasoline may not be indicated on the gasoline pump; therefore, you should ask your gasoline retailer whether the gasoline contains MMT. MMT is prohibited in Federal and California reformulated gasoline.

Fuel System Cautions

CAUTION!

Follow these guidelines to maintain your vehicle's performance:

- **The use of leaded gasoline is prohibited by Federal law. Using leaded gasoline can impair engine performance and damage the emissions control system.**

(Continued)

CAUTION! ***(Continued)***

- **An out-of-tune engine or certain fuel or ignition malfunctions can cause the catalytic converter to overheat. If you notice a pungent burning odor or some light smoke, your engine may be out of tune or malfunctioning and may require immediate service. Contact an authorized dealer for service assistance.**
- **The use of fuel additives, which are now being sold as octane enhancers, is not recommended. Most of these products contain high concentrations of methanol. Fuel system damage or vehicle performance problems resulting from the use of such fuels or additives is not the responsibility of the manufacturer and may void or not be covered under the New Vehicle Limited Warranty.**

NOTE: Intentional tampering with the emissions control system can result in civil penalties being assessed against you.

Carbon Monoxide Warnings

WARNING!

Carbon monoxide (CO) in exhaust gases is deadly. Follow the precautions below to prevent carbon monoxide poisoning:

- **Do not inhale exhaust gases. They contain carbon monoxide, a colorless and odorless gas, which can kill. Never run the engine in a closed area, such as a garage, and never sit in a parked vehicle with the engine running for an extended period. If the vehicle is stopped in an open area with the engine running for more than a short period, adjust the ventilation system to force fresh, outside air into the vehicle.**
- **Guard against carbon monoxide with proper maintenance. Have the exhaust system inspected every time the vehicle is raised. Have any abnormal conditions repaired promptly. Until repaired, drive with all side windows fully open.**

FLEXIBLE FUEL (3.6L ENGINE ONLY)

E-85 General Information

The information in this section is unique for Flexible Fuel vehicles only. These vehicles can be identified by a unique fuel filler door label that states **Ethanol (E-85) or Unleaded Gasoline Only** and/or a yellow fuel cap. Please refer to the other sections of this manual for information on features that are common between Flexible Fuel and Non-Flexible Fuel powered vehicles.

CAUTION!

Only vehicles with the E-85 fuel filler door label or a yellow gas cap can operate on E-85.

Ethanol Fuel (E-85)

E-85 is a mixture of approximately 85% ethanol and 15% unleaded gasoline.

WARNING!

Ethanol vapors are extremely flammable and could cause serious personal injury. Never have any smoking materials lit or products that can cause spark in or near the vehicle when removing the fuel filler tube cap (gas cap) or filling the tank. Do not use E-85 as a cleaning agent and never use it near an open flame.

Fuel Requirements

If your vehicle is E-85 compatible, it will operate on unleaded gasoline with any octane rating greater than 87 (R+M)/2, or solely E-85 fuel, or any mixture of these fuels.

For best results, avoid fueling patterns alternating between E-85 and unleaded gasoline.

When switching fuel types:

- Add 5 gallons (19 liters) or more when refueling.
- Drive the vehicle immediately after refueling for at least 5 miles (8 km).

Observing these precautions will avoid possible hard starting and/or driveability problems during warm up.

NOTE:

- Use seasonally adjusted E-85 fuel (ASTM D5798). With non-seasonally adjusted E-85 fuel, hard starting and rough idle following start up may be experienced even if the above recommendations are followed, especially when the ambient temperature is below 32°F (0°C).
- Some additives used in regular gasoline are not fully compatible with E-85 and may form deposits in your engine. To eliminate driveability issues that may be caused by these deposits, a supplemental gasoline additive, such as Mopar Injector Cleanup or Techron may be used.

Selection Of Engine Oil For Flexible Fuel Vehicles (E-85) And Gasoline Vehicles

FFV vehicles operated on E-85 require specially formulated engine oils. These special requirements are included in Mopar engine oils, and in equivalent oils meeting FCA US Material Standard MS-6395. It is recommended that engine oils that are API Certified and meet the requirements of Material Standard MS-6395 be used. MS-6395 contains additional requirements, developed during extensive fleet testing, to provide additional protection to FCA US LLC engines.

Starting

The characteristics of E-85 fuel make it unsuitable for use when ambient temperatures fall below 0°F (-18°C). In the range of 0°F (-18°C) to 32°F (0°C), an increase in the time it takes for your engine to start may be experienced, and a deterioration in driveability (sags and/or hesitations) until the engine is fully warmed up. These issues may be improved with the use of seasonally adjusted E-85 fuel.

NOTE: Use of the engine block heater (if equipped) may improve engine start time when using E-85 fuel when the ambient temperature is less than 32°F (0°C).

Cruising Range

Because E-85 fuel contains less energy per gallon/liter than gasoline, an increase in fuel consumption will be experienced. The miles per gallon (mpg)/kilometers per liter and the driving range will decrease by approximately 30%, compared to gasoline operation.

Replacement Parts

All fuel and engine components in your Flexible Fuel Vehicle (FFV) are designed to be compatible with ethanol. Ethanol compatible service components are required.

CAUTION!

Replacing fuel system components with non-ethanol compatible components can damage your vehicle.

Maintenance

CAUTION!

Do not use ethanol mixture greater than 85% in your vehicle. It will cause difficulty in cold starting and may affect drivability.

FLUID CAPACITIES

	U.S.	Metric
Fuel (Approximate)		
3.6L Engine (87 Octane, 0-15% Ethanol or up to 85% Ethanol for Flex Fuel (E-85) Engine)	18.5 Gallons	70 Liters
5.7L Engine (89 Octane Recommended – 87 Octane Acceptable, 0-15% Ethanol)	18.5 Gallons	70 Liters
Engine Oil With Filter		
3.6L Engine (SAE 5W-20, API Certified)	6 Quarts	5.6 Liters
5.7L Engine (SAE 5W-20, API Certified)	7 Quarts	6.6 Liters
Cooling System*		
3.6L Engine (Mopar Antifreeze/Engine Coolant 10 Year/150,000 Mile Formula or equivalent)	10 Quarts	9.5 Liters
5.7L Engine – without Severe Duty II Cooling System (Mopar Antifreeze/ Engine Coolant 10 Year/150,000 Mile Formula or equivalent)	14.5 Quarts	13.9 Liters
5.7L Engine – with Severe Duty II Cooling System (Mopar Antifreeze/ Engine Coolant 10 Year/150,000 Mile Formula or equivalent)	15 Quarts	14.3 Liters
* Includes heater and coolant recovery bottle filled to MAX level.		

FLUIDS AND LUBRICANTS

Engine

Component	Fluid, Lubricant, or Genuine Part
Engine Coolant	We recommend you use Mopar Antifreeze/Coolant 10 Year/150,000 Mile Formula OAT (Organic Additive Technology).
Engine Oil	We recommend you use API Certified SAE 5W-20 Engine Oil, meeting the requirements of FCA Material Standard MS-6395 such as Mopar, Pennzoil, and Shell Helix Ultra. Refer to your engine oil filler cap for correct SAE grade.
Engine Oil Filter	We recommend you use a Mopar Engine Oil Filter.
Spark Plugs	We recommend you use Mopar Spark Plugs.
Fuel Selection – 3.6L Engine	87 Octane, 0-15% Ethanol.
Fuel Selection – 3.6L Flex Fuel (E-85) Engine	87 Octane, Up to 85% Ethanol.
Fuel Selection – 5.7L Engine	89 Octane Recommended – 87 Octane Acceptable, 0-15% Ethanol.

CAUTION!

- **Mixing of engine coolant (antifreeze) other than specified Organic Additive Technology (OAT) engine coolant (antifreeze), may result in engine damage and may decrease corrosion protection. Organic Additive Technology (OAT) engine coolant is different and should not be mixed with Hybrid Organic Additive Technology (HOAT) engine coolant (antifreeze) or any "globally compatible" coolant (antifreeze). If a non-OAT engine coolant (antifreeze) is introduced into the cooling system in an emergency, the cooling system will need to be drained, flushed,**

(Continued)

CAUTION! *(Continued)*

and refilled with fresh OAT coolant (conforming to MS.90032), by an authorized dealer as soon as possible.
- **Do not use water alone or alcohol-based engine coolant (antifreeze) products. Do not use additional rust inhibitors or antirust products, as they may not be compatible with the radiator engine coolant and may plug the radiator.**
- **This vehicle has not been designed for use with propylene glycol-based engine coolant (antifreeze). Use of propylene glycol-based engine coolant (antifreeze) is not recommended.**

Chassis

Component	Fluid, Lubricant, Or Genuine Part
Automatic Transmission — 8-Speed Transmission	Use only Mopar ZF 8&9 Speed ATF Automatic Transmission Fluid, or equivalent. Failure to use the correct fluid may affect the function or performance of your transmission.
Brake Master Cylinder	We recommend you use Mopar DOT 3 and SAE J1703. If DOT 3 brake fluid is not available, then DOT 4 is acceptable.
Front Axle – AWD (If Equipped)	We recommend you use Mopar Synthetic Gear Lubricant SAE 75W90 (API GL-5).
Rear Axle	We recommend you use Mopar OD Synthetic Gear Lubricant SAE 75W85 (API GL-5).
Transfer Case – AWD (If Equipped)	We recommend you use Mopar Transfer Case Lubricant for BorgWarner 44–40.

MULTIMEDIA

CONTENTS

- UCONNECT SYSTEMS 421
- DRAG & DROP MENU BAR 421
- CYBERSECURITY 422
- UCONNECT SETTINGS 423
  - Customer Programmable Features — Uconnect 4C/4C NAV Settings 424
- STEERING WHEEL AUDIO CONTROLS 445
  - Radio Operation. 446
  - Media Mode 446
- AUX/USB/MP3 CONTROL 447
- RADIO OPERATION AND MOBILE PHONES . . .448
  - Regulatory And Safety Information 448
- UCONNECT VOICE RECOGNITION QUICK TIPS 449
  - Introducing Uconnect 449
  - Get Started 450
  - Basic Voice Commands 450
  - Radio 451
  - Media 452
  - Phone 453
  - Voice Text Reply — If Equipped 454
  - Climate 455
  - Navigation (4C NAV) 456
  - SiriusXM Guardian (4C/4C NAV) — If Equipped 457
  - Register (4C/4C NAV) 458
  - Vehicle Health Report/Alert (4C/4C NAV). 458
  - Mobile App (4C/4C NAV) 458
  - SiriusXM Travel Link (4C NAV). 459

- Siri Eyes Free — If Equipped 460
- Do Not Disturb 460
- Android Auto — If Equipped 461
- Apple CarPlay — If Equipped. 462
- General Information 463
- Additional Information. 464

UCONNECT SYSTEMS

For detailed information about your Uconnect system, refer to your Uconnect Owner's Manual Supplement.

NOTE: Uconnect screen images are for illustration purposes only and may not reflect exact software for your vehicle.

DRAG & DROP MENU BAR

The Uconnect features and services in the main menu bar are easily changed for your convenience. Simply follow these steps:

Uconnect 4C/4C NAV Main Menu

1. Press the "Apps" button to open the App screen.
2. Press and hold, then drag the selected App to replace an existing shortcut in the main menu bar.

The new app shortcut, that was dragged down onto the main menu bar, will now be an active App/shortcut.

NOTE: This feature is only available if the vehicle is in PARK.

CYBERSECURITY

Your vehicle may be a connected vehicle and may be equipped with both wired and wireless networks. These networks allow your vehicle to send and receive information. This information allows systems and features in your vehicle to function properly.

Your vehicle may be equipped with certain security features to reduce the risk of unauthorized and unlawful access to vehicle systems and wireless communications. Vehicle software technology continues to evolve over time and FCA US LLC, working with its suppliers, evaluates and takes appropriate steps as needed. Similar to a computer or other devices, your vehicle may require software updates to improve the usability and performance of your systems or to reduce the potential risk of unauthorized and unlawful access to your vehicle systems.

The risk of unauthorized and unlawful access to your vehicle systems may still exist, even if the most recent version of vehicle software (such as Uconnect software) is installed.

WARNING!

- **It is not possible to know or to predict all of the possible outcomes if your vehicle's systems are breached. It may be possible that vehicle systems, including safety related systems, could be impaired or a loss of vehicle control could occur that may result in an accident involving serious injury or death.**
- **ONLY insert media (e.g., USB, SD card, or CD) into your vehicle if it came from a trusted source. Media of unknown origin could possibly contain malicious software, and if installed in your vehicle, it may increase the possibility for vehicle systems to be breached.**
- **As always, if you experience unusual vehicle behavior, take your vehicle to your nearest authorized dealer immediately.**

NOTE:

- FCA US LLC or your dealer may contact you directly regarding software updates.
- To help further improve vehicle security and minimize the potential risk of a security breach, vehicle owners should:
  - Routinely check www.driveuconnect.com (U.S. Residents) or www.driveuconnect.ca (Canadian Residents) to learn about available Uconnect software updates.
  - Only connect and use trusted media devices (e.g. personal mobile phones, USBs, CDs).

Privacy of any wireless and wired communications cannot be assured. Third parties may unlawfully intercept information and private communications without your consent. For further information, refer to "Data Collection & Privacy" in your Uconnect Owner's Manual Supplement or "Onboard Diagnostic System (OBD II) Cybersecurity" in "Getting To Know Your Instrument Panel".

UCONNECT SETTINGS

The Uconnect system uses a combination of buttons on the touchscreen and buttons on the faceplate located on the center of the instrument panel that allows you to access and change the customer programmable features.

CAUTION!

Do NOT attach any object to the touchscreen, doing so can result in damage to the touchscreen.

Uconnect 4C/4C NAV Buttons On The Touchscreen And Buttons On The Faceplate

1 — Uconnect Buttons On The Touchscreen
2 — Uconnect Buttons On The Faceplate

Customer Programmable Features — Uconnect 4C/4C NAV Settings

Press the "Apps " button (if equipped), and then press the "Settings" button on the touchscreen to display the menu setting screen. In this mode, the Uconnect system allows you to access programmable features that may be equipped such as Language, Display, Units, Voice, Clock & Date, Safety & Driving Assistance, Mirrors & Wipers, Lights, Doors & Locks, Auto-On Comfort, Key Off Options, Audio, Phone/Bluetooth, SiriusXM Setup, Reset, and System Information.

NOTE: Depending on the vehicle's options, feature settings may vary.

When making a selection, press the button on the touchscreen to enter the desired mode. Once in the desired mode, press and release the preferred setting "option" until a check-mark appears next to the setting, showing that setting has been selected. Once the setting is complete, press the "X" button on the touchscreen to close out of the settings screen. Pressing the up or down arrow button on the right side of the screen will allow you to toggle up or down through the available settings.

Language

After pressing the "Language" button on the touchscreen, the following settings will be available:

Setting Name	Selectable Options		
Set Language	English	Français	Español

Display

After pressing the “Display” button on the touchscreen, the following settings will be available:

Setting Name	Selectable Options	
Display Mode	Auto	Manual
Display Brightness With Headlights ON	+	–
NOTE: • When in the “Display Brightness With Headlights ON” display, you may select the brightness with the headlights on. • To make changes to the ″Display Brightness with Headlights ON″ setting, the headlights must be on and the interior dimmer switch must not be in the ″party″ or ″parade″ positions.		
Display Brightness With Headlights OFF	+	–
NOTE: • When in the “Display Brightness With Headlights OFF” display, you may select the brightness with the headlights off. Adjust the brightness from (1–10) with the “+” and “–” buttons on the touchscreen. • To make changes to the ″Display Brightness with Headlights OFF″ setting, the headlights must be off and the interior dimmer switch must not be in the ″party″ or ″parade″ positions.		

Setting Name	Selectable Options	
Set Theme	List Of Options	
NOTE: When in the “Set Theme” display, you may select the theme for the display screen. To make your selection, press the ″Set Theme″ button on the touchscreen, then select the desired theme option button until a check-mark appears showing that the setting has been selected.		
Touchscreen Beep	On	Off
Controls Screen Time-Out — If Equipped	On	Off
NOTE: When the “Control Screen Time Out” feature is selected, the controls screen will stay open for five seconds before the screen times out. With the feature deselected, the screen will stay open until it is manually closed.		
Navigation Next Turn Pop-ups Displayed In Cluster — If Equipped	On	Off
NOTE: When the “Navigation Turn-By-Turn In Cluster” feature is selected, the turn-by-turn directions will appear in the instrument cluster display as the vehicle approaches a designated turn within a programmed route.		

Units

After pressing the "Units" button on the touchscreen, you may select each unit of measure independently displayed in the instrument cluster display, and navigation system (if equipped). The following selectable units of measure are listed below:

Setting Name	Selectable Options		
Units	US	Metric	Custom

NOTE:
The "Custom" option allows you to set the "Speed" (MPH, or km/h), "Distance" (mi, or km), "Fuel Consumption" [MPG (US), MPG (UK), L/100 km, or km/L], "Pressure" (psi, kPa, or bar), and "Temperature" (°C, or °F) units of measure independently.

Voice

After pressing the "Voice" button on the touchscreen, the following settings will be available:

Setting Name	Selectable Options		
Voice Response Length	Brief	Detailed	
Show Command List	Never	w/Help	Always

Clock

After pressing the "Clock" button on the touchscreen, the following settings will be available:

Setting Name	Selectable Options	
Sync Time With GPS — If Equipped	On	Off
NOTE: The "Sync Time With GPS" feature will allow you to automatically have the radio set the time.		
Set Time Hours	+	–
Set Time Minutes	+	–
Time Format	12 hrs	24 hrs
	AM	PM
Show Time In Status Bar — If Equipped	On	Off
NOTE: The "Show Time In Status Bar" feature will allow you to turn on or shut off the digital clock in the status bar.		

Safety & Driving Assistance

After pressing the "Safety & Driving Assistance" button on the touchscreen, the following settings will be available:

Setting Name	Selectable Options	
Forward Collision Warning — If Equipped	On	Off
NOTE: Changing the FCW status to "Off" prevents the system from warning you of a possible collision with the vehicle in front of you. The FCW system state is kept in memory from one ignition cycle to the next. If the system is turned OFF, it will remain off when the vehicle is restarted.		
Forward Collision Warning Sensitivity — If Equipped	Near	Far
NOTE: The Forward Collision Warning (FCW) feature provides an audible and/or visual warning to potential forward collisions. The feature can be can be set to "Far", or set to "Near". The default status of FCW is the "Far" setting. This means the system will warn you of a possible collision with the vehicle in front of you when you are farther away. This gives you the most reaction time. To change the setting for more dynamic driving, select the "Near" setting. This warns you of a possible collision when you are much closer to the vehicle in front of you.		

Setting Name	Selectable Options		
Forward Collision Warning (FCW) — Active Braking	On	Off	
NOTE: The FCW system includes Advanced Brake Assist (ABA). When this feature is selected, the ABA applies additional brake pressure when the driver requests insufficient brake pressure to avoid a potential frontal collision. The ABA system becomes active at 5 mph (8 km/h). To make your selection, press the "Forward Collision Warning Active Braking" button on the touchscreen, until a check-mark appears next to setting, indicating that the setting had been selected.			
LaneSense Warning — If Equipped	Early	Medium	Late
NOTE: When the "LaneSense Warning" feature is selected, it sets the distance at which the steering wheel will provide feedback for potential lane departures.			
LaneSense Strength — If Equipped	Low	Medium	High
NOTE: When the "LaneSense Strength" feature is selected, it sets the strength of the steering wheel feedback for potential lane departures.			

Setting Name	Selectable Options		
ParkSense — If Equipped	Sound Only	Sound & Display	
NOTE: The ParkSense system will scan for objects behind the vehicle when the gear selector is in REVERSE and the vehicle speed is less than 11 mph (18 km/h). It will provide an alert (audible and/or visual) to indicate the proximity to other objects. The system can be enabled with Sound Only, or Sound and Display. To change the ParkSense status, press and release the "Sound Only" or "Sound and Display" button.			
Front ParkSense Volume	Low	Medium	High
NOTE: The Front ParkSense Chime Volume settings can be selected from the Uconnect System. The chime volume settings include Low, Medium, and High. The factory default volume setting is Medium. ParkSense will retain its last known configuration state through ignition cycles.			
Rear ParkSense Volume	Low	Medium	High
NOTE: The Rear ParkSense Chime Volume settings can be selected from the Uconnect System. The chime volume settings include Low, Medium, and High. ParkSense will retain its last known configuration state through ignition cycles.			
Electric Power Steering Default — If Equipped	Normal	Sport	Comfort
NOTE: When the "Electric Power Steering Default" is selected, it allows you to change the default setting of your vehicle to either normal, sport, or comfort.			

Setting Name	Selectable Options		
Blind Spot Alert — If Equipped	Off	Lights	Lights & Chime
NOTE: • When this feature is selected, the Blind Spot Alert feature Provides alerts, visual and/or audible, to indicate objects in your blind spot. The Blind Spot Alert feature can be activated in "Lights" mode. When this mode is selected, the Blind Spot Monitor (BSM) system is activated and will only show a visual alert in the exterior mirrors. When "Lights & Chime" mode is activated, the Blind Spot Monitor (BSM) will show a visual alert in the exterior mirrors as well as an audible alert when the turn signal is on. • If your vehicle has experienced any damage in the area where the sensor is located, even if the fascia is not damaged, the sensor may have become misaligned. Take your vehicle to an authorized dealer to verify sensor alignment. Having a sensor that is misaligned will result in the BSM not operating to specification.			
ParkView Backup Camera Delay	On	Off	
NOTE: When the vehicle is shifted out of REVERSE (with camera delay turned off), the rear camera mode is exited and the previously viewed screen appears again. When the vehicle is shifted out of REVERSE (with camera delay turned on), the rear view image with dynamic grid lines will be displayed for up to ten seconds after shifting out of "REVERSE" unless the forward vehicle speed exceeds 8 mph (13 km/h), the transmission is shifted into "PARK" or the ignition is switched to the OFF position.			

Setting Name	Selectable Options	
ParkView Backup Camera Active Guidelines	On	Off
NOTE: Your vehicle may be equipped with the ParkView Rear Back Up Camera Active Guidelines that allows you to see active guidelines over the ParkView Back up camera display whenever the gear selector is put into REVERSE. The image will be displayed on the radio touchscreen display along with a caution note to “check entire surroundings” across the top of the screen. After five seconds, this note will disappear.		
Hill Start Assist — If Equipped	On	Off
NOTE: When this feature is selected, the Hill Start Assist (HSA) system is active.		
Paddle Shifters— If Equipped	On	Off

Mirrors & Wipers

After pressing the "Mirrors and Wipers" button on the touchscreen, the following settings will be available:

Setting Name	Selectable Options	
Headlights With Wipers	On	Off
Rain Sensing Auto Wipers	On	Off
NOTE: When this feature is selected and the wipers are on, the system will automatically activate the windshield wipers if it senses moisture on the windshield.		
Tilt Side Mirrors in Reverse	On	Off
NOTE: When the "Tilt Side Mirror In Reverse" feature is selected, the exterior sideview mirrors will tilt downward when the ignition is in the RUN position and the transmission gear selector is in the REVERSE position. The mirrors will move back to their previous position when the transmission is shifted out of REVERSE.		

Lights

After pressing the "Lights" button on the touchscreen, the following settings will be available:

Setting Name	Selectable Options	
Headlight Off Delay	0 sec	30 sec
	60 sec	90 sec
Headlight Illumination On Approach	0 sec	30 sec
	60 sec	90 sec
Headlights With Wipers — If Equipped	On	Off
Auto Dim High Beams — If Equipped	On	Off
Daytime Running Lights — If Equipped	On	Off
Steering Directed Lights	On	Off
Flash Lights With Lock	On	Off

Doors & Locks

After pressing the "Doors & Locks" button on the touchscreen, the following settings will be available:

Setting Name	Selectable Options		
Auto Door Locks	On	Off	
Auto Unlock On Exit	On	Off	
NOTE: When the "Auto Unlock On Exit" feature is selected, all doors will unlock when the vehicle is stopped, the transmission is in the PARK or NEUTRAL position and the driver's door is opened.			
Flash Lights With Lock	On	Off	
NOTE: When the "Flash Lights With Lock" feature is selected, the exterior lights will flash when the doors are locked or unlocked with the key fob, or when using the passive entry feature. This feature may be selected with or without the "Sound Horn With Lock" feature selected.			
Sound Horn With Lock	Off	1st Press	2nd Press
Sound Horn With Remote Start	On	Off	

Setting Name	Selectable Options	
1st Press Of Key Fob Unlocks	Driver Door	All Doors
NOTE: • When "Driver Door" is selected with 1st Press Of Key Fob Unlocks, only the driver's door will unlock with the first press of the key fob unlock button. You must press the key fob unlock button twice to unlock the passenger's doors. When "All Doors" is selected for 1st Press Of Key Fob Unlocks, all doors will unlock on the first press of the key fob unlock button. • If the vehicle is programmed 1st Press Of Key Fob Unlocks "All Doors," all doors will unlock no matter which Passive Entry equipped door handle is grasped. If 1st Press Of Key Fob Unlocks "Driver Door" is programmed, only the driver's door will unlock when the driver's door is grasped. With Passive Entry, if 1st Press Of Key Fob Unlocks "Driver Door" is programmed, touching the handle more than once will result in only the driver's door opening. If "Driver Door" is selected, once the driver door is opened, the interior door lock/unlock switch can be used to unlock all doors (or use key fob).		
Passive Entry — If Equipped	On	Off
NOTE: The "Passive Entry" feature allows you to lock and unlock the vehicles door(s) without having to push the key fob lock or unlock buttons. To make your selection, press the "Passive Entry" button on the touchscreen, until a check-mark appears next to the setting, showing that the setting has been selected.		

Setting Name	Selectable Options	
Personal Settings Linked To Key Fob — If Equipped	On	Off

NOTE:
- This feature provides automatic recall of all settings stored to a memory location (driver's seat, exterior mirrors, steering column position and radio station pre-sets) to enhance driver mobility when entering and exiting the vehicle.
- The seat returns to the memorized seat location (if "Personal Settings Linked to Key Fob" is set to on) when the key fob is used to unlock the door.

Auto Comfort Systems — If Equipped

After pressing the "Auto-On Comfort" button on the touchscreen, the following settings will be available:

Setting Name	Selectable Options		
Auto-On Driver Heated Seat	Off	Remote Start	All Starts

NOTE:
When this feature is selected the driver's heated seat and heated steering wheel will automatically turn on when temperatures are below 40° F (4.4° C). When temperatures are above 80° F (26.7° C) the driver's vented seat will turn on.

Engine Off Options

After pressing the "Engine Off Options" button on the touchscreen, the following settings will be available:

Setting Name	Selectable Options	
Easy Exit Seat — If Equipped	On	Off
NOTE: When the "Easy Exit Seat" feature is selected, the driver's seat will automatically move rearward once the engine is shut off.		
Engine Off Power Delay	0 sec	45 sec
	5 mins	10 mins
NOTE: When the "Engine Off Power Delay" feature is selected, the power window switches, radio, Uconnect Phone system (if equipped), DVD video system (if equipped), power sunroof (if equipped), and power outlets will remain active for up to ten minutes after the ignition is cycled to OFF. Opening either front door will cancel this feature. To change the Engine Off Power Delay setting, press the "+" or "-" button on the touchscreen to select your desired time interval, and choose from "0 seconds," "45 seconds," "5 minutes" or "10 minutes."		
Headlight Off Delay	0	30
	60	90
NOTE: When the "Headlight Off Delay" feature is selected, the driver can choose to have the headlights remain on for 0, 30, 60, or 90 seconds when exiting the vehicle. To change the Headlight Off Delay status press the "+" or "–" button on the touchscreen to select your desired time interval.		

Audio

After pressing the "Audio" button on the touchscreen, the following settings will be available:

Setting Name	Selectable Options			
Balance/Fade	"Speaker" Icon		Arrow Buttons	
NOTE: The "Balance/Fade" feature allows you to adjust the Balance and Fade settings. Press and drag the speaker icon, use the arrows to adjust, or tap the "Speaker" icon to readjust to the center.				
Equalizer	+		–	
NOTE: • The "Equalizer" feature allows you to adjust the Bass, Mid, and Treble settings. Adjust the settings with the "+" and "–" setting buttons on the touchscreen or by selecting any point on the scale between the "+" and "–" buttons on the touchscreen. • Bass/Mid/Treble allows you to simply slide your finger up or down to change the setting as well as press directly on the desired setting.				
Speed Adjusted Volume	Off	1	2	3
NOTE: The "Speed Adjusted Volume" feature increases or decreases volume relative to vehicle speed. To change the Speed Adjusted Volume press the "Off," "1," "2" or "3" button on the touchscreen.				

Setting Name	Selectable Options	
Surround Sound — If Equipped	On	Off
NOTE: The “Surround Sound” feature provides simulated surround sound mode. To make your selection, press the “Surround Sound” button on the touchscreen, select “On” or “Off.”		
AUX Volume Offset — If Equipped	-3	+3
NOTE: The “AUX Volume Offset” feature provides the ability to tune the audio level for portable devices connected through the AUX input. To make your selection, press the AUX Volume Match button on the touchscreen, choose a level from –3 to +3.		
Auto Play	On	Off
NOTE: The Auto Play feature allows an media device to begin playing when the media device is plugged in. To make your selection, press the On or Off buttons to activate or deactivate Auto Play.		

Phone/Bluetooth

After pressing the “Phone/Bluetooth” button on the touchscreen, the following settings will be available:

Setting Name	Selectable Options	
Do Not Disturb	List of Settings	
NOTE: Press “Do Not Disturb” to access the available settings. The following settings are: Auto Reply (both, text, call), Auto Reply Message (custom, default) and Custom Auto Reply Message (create message).		
Paired Phones And Audio Sources	List Of Paired Phones and Audio Sources	
NOTE: The “Paired Phones And Audio Sources” feature shows which phones or media devices are paired to the Phone/Bluetooth system. For further information, refer to the Uconnect Owner’s Manual Supplement.		
AutoShow Smartphone Display Upon Connection	On	Off
Smartphone Projection Manager	On	Off

SiriusXM Setup — If Equipped

After pressing the "SiriusXM Setup" button on the touchscreen, the following settings will be available:

Setting Name	Selectable Options	
Tune Start	On	Off
Channel Skip	Name of Channel	
NOTE: SiriusXM can be programmed to skip channels. To make your selection, press the "Channel Skip" button on the touchscreen, select the channels you would like to skip.		
Subscription Information	Subscription Info	
NOTE: New vehicle purchasers or lessees will receive a free limited time subscription to SiriusXM Satellite Radio with your radio. Following the expiration of the free services, it will be necessary to access the information on the Subscription Information screen to re-subscribe. 1. Press the "Subscription Info" button on the touchscreen to access the Subscription Information screen. 2. Write down the SIRIUS ID numbers for your receiver. To reactivate your service, either call the number listed on the screen or visit the provider online. **NOTE:** SiriusXM Travel Link is a separate subscription.		

Reset

After pressing the “Reset” button on the touchscreen, the following settings will be available:

Setting Name	Selectable Options		
Restore Settings to Default	OK	Cancel	X
NOTE: When this feature is selected, it will reset all settings to their default settings. To restore the settings to their default setting, press the “Restore Settings” button on the touchscreen. A pop-up will appear asking ″Are you sure you want to reset your settings to default?”			
Restore App Drawer to Default Order	OK	Cancel	
Restore Apps	OK	Cancel	
Clear Personal Data	OK	Cancel	X
NOTE: When this feature is selected, it will remove all personal data including Bluetooth devices and presets. To remove personal information, press the “Clear Personal Data” button and a pop-up will appear asking ″Are you sure you want to clear all personal data?”			
Modem Reset	OK	Cancel	

System Information

After pressing the "System Information" button on the touchscreen, the following settings will be available:

Setting Name	Selectable Options
Software License	System Software Information Screen
NOTE: When the "System Information" feature is selected, a "System Software Information" screen will appear, displaying the system software version.	

STEERING WHEEL AUDIO CONTROLS

The remote sound system controls are located on the rear surface of the steering wheel at the three and nine o'clock positions.

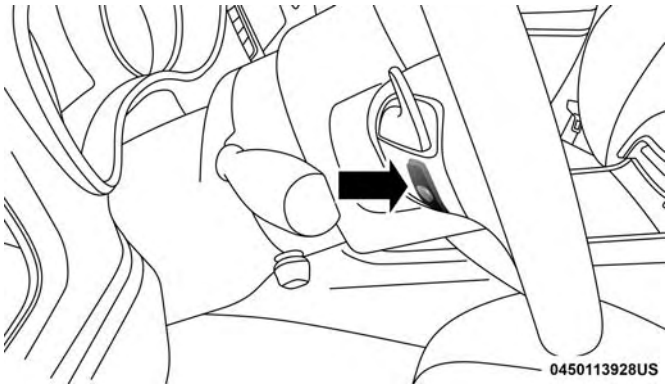

Steering Wheel Audio Controls (Back View Of Steering Wheel)

The right-hand control is a rocker-type switch with a push-button in the center and controls the volume and mode of the sound system. Pushing the top of the rocker switch will increase the volume, and pushing the bottom of the rocker switch will decrease the volume.

Pushing the center button will make the radio switch between the various modes available (AM/FM/SXM/AUX/VES, etc.).

The left-hand control is a rocker-type switch with a push-button in the center. The function of the left-hand control is different depending on which mode you are in.

The following describes the left-hand control operation in each mode.

Radio Operation

Pushing the top of the switch will “Seek” up for the next listenable station and pushing the bottom of the switch will “Seek” down for the next listenable station.

The button located in the center of the left-hand control will tune to the next preset station that you have programmed in the radio preset button.

Media Mode

Pushing the top of the switch once goes to the next track on the selected media (AUX/USB/Bluetooth). Pushing the bottom of the switch once goes to the beginning of the current track, or to the beginning of the previous track if it is within eight seconds after the current track begins to play.

AUX/USB/MP3 CONTROL

This feature allows an external USB device to be plugged into the USB port.

For further information, refer to the Uconnect Owner's Manual Supplement.

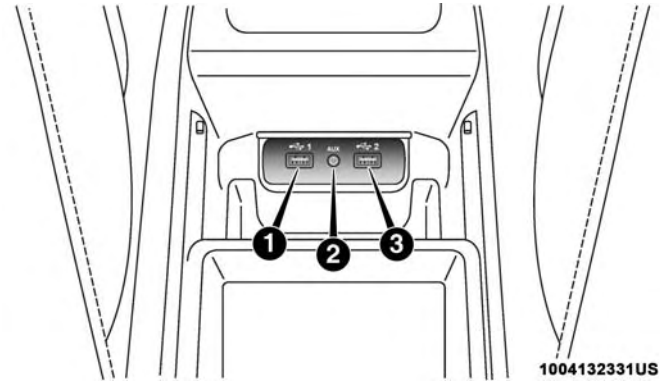

AUX/USB Ports

1 — USB 1 Port
2 — AUX Jack
3 — USB 2 Port

Located on the rear of the front center console are dual USB "Charge Only" ports.

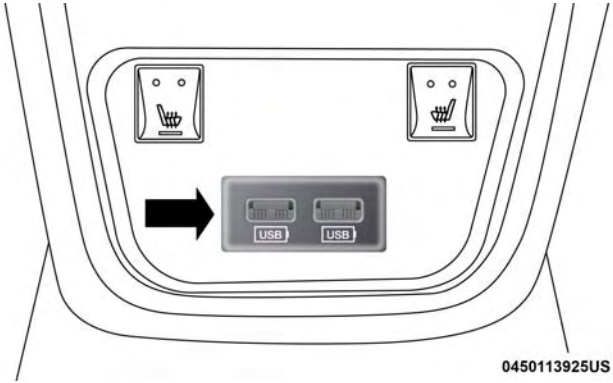

Rear USB Charging Ports

The USB "Charge Only" ports will recharge battery operated USB devices when connected.

RADIO OPERATION AND MOBILE PHONES

Under certain conditions, the mobile phone being on in your vehicle can cause erratic or noisy performance from your radio. This condition may be lessened or eliminated by relocating the mobile phone antenna. This condition is not harmful to the radio. If your radio performance does not satisfactorily "clear" by the repositioning of the antenna, it is recommended that the radio volume be turned down or off during mobile phone operation when not using Uconnect (if equipped).

Regulatory And Safety Information

USA/CANADA

Exposure to Radio Frequency Radiation

The radiated output power of the internal wireless radio is far below the FCC and IC radio frequency exposure limits. Nevertheless, the wireless radio will be used in such a manner that the radio is 8 in (20 cm) or further from the human body.

The internal wireless radio operates within guidelines found in radio frequency safety standards and recommendations, which reflect the consensus of the scientific community.

The radio manufacturer believes the internal wireless radio is safe for use by consumers. The level of energy emitted is far less than the electromagnetic energy emitted by wireless devices such as mobile phones. However, the use of wireless radios may be restricted in some situations or environments, such as aboard airplanes. If you are unsure of restrictions, you are encouraged to ask for authorization before turning on the wireless radio.

The following regulatory statement applies to all Radio Frequency (RF) devices equipped in this vehicle:

This device complies with Part 15 of the FCC Rules and with Industry Canada license-exempt RSS standard(s). Operation is subject to the following two conditions:

1. This device may not cause harmful interference, and
2. This device must accept any interference received, including interference that may cause undesired operation.

NOTE: Changes or modifications not expressly approved by the party responsible for compliance could void the user's authority to operate the equipment.

NOTE:

- This equipment has been tested and found to comply with the limits for a Class B digital device, pursuant to Part 15 of the FCC Rules. These limits are designed to provide reasonable protection against harmful interference in a residential installation. This equipment generates, uses and can radiate radio frequency energy and, if not installed and used in accordance with the instructions, may cause harmful interference to radio communications. However, there is no guarantee that interference will not occur in a particular installation.
- If this equipment does cause harmful interference to radio or television reception, which can be determined by turning the equipment off and on, the user is encouraged to try to correct the interference by one or more of the following measures:
  1. Increase the separation between the equipment and receiver.
  2. Consult an authorized dealer or an experienced radio technician for help.

UCONNECT VOICE RECOGNITION QUICK TIPS

Introducing Uconnect

Start using Uconnect Voice Recognition with these helpful quick tips. It provides the key Voice Commands and tips you need to know to control your Uconnect system.

Uconnect 4C NAV

NOTE: If you see the NAV icon on the bottom bar, or in the Apps menus, of your touchscreen, you have the Uconnect 4C NAV system. If not, you have a Uconnect 4C system.

Get Started

All you need to control your Uconnect system with your voice are the buttons on your steering wheel.

Helpful hints for using Voice Recognition:

- Visit UconnectPhone.com to check mobile device and feature compatibility and to find phone pairing instructions.
- Reduce background noise. Wind and passenger conversations are examples of noise that may impact recognition.
- Speak clearly at a normal pace and volume while facing straight ahead. The microphone is positioned on the rearview mirror and aimed at the driver.
- Each time you give a Voice Command, you must first push either the Voice Recognition (VR) or Phone button, wait until **after** the beep, then say your Voice Command.
- You can interrupt the help message or system prompts by pushing the VR or Phone button and saying a Voice Command from the current category.

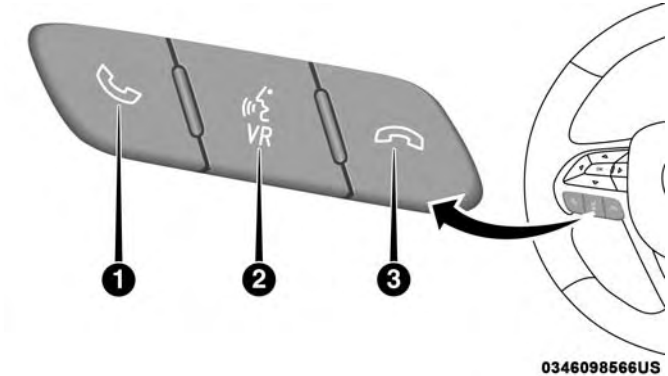

Uconnect Voice Command Buttons

1 — Push To Initiate Or To Answer A Phone Call, Send Or Receive A Text
2 — For All Radios: Push To Begin Voice Commands
3 — Push To End Call

Basic Voice Commands

The basic Voice Commands below can be given at any point while using your Uconnect system.

Push the VR button . After the beep, say:

- " **Cancel**" to stop a current voice session
- " **Help**" to hear a list of suggested Voice Commands

- " **Repeat**" to listen to the system prompts again

Notice the visual cues that inform you of your voice recognition system's status. Cues appear on the touch-screen.

Radio

Use your voice to quickly get to the AM, FM or SiriusXM Satellite Radio stations you would like to hear. (Subscription or included SiriusXM Satellite Radio trial required.)

Push the VR button . After the beep, say:

- " **Tune to** ninety-five-point-five FM"
- " **Tune to Satellite Channel** Hits 1"

TIP: At any time, if you are not sure of what to sav or want to learn a Voice Command, push the VR button and say " **Help**." The system provides you with a list of commands.

Uconnect 4C/4C NAV Radio

Media

Uconnect offers connections via USB, Bluetooth and auxiliary ports (if equipped). Voice operation is only available for connected USB and AUX devices.

Push the VR button . After the beep, say one of the following commands and follow the prompts to switch your media source or choose an artist.

- " **Change source to** Bluetooth"
- " **Change source to** AUX"
- " **Change source to** USB"
- " **Play artist** Beethoven"; " **Play album** Greatest Hits"; " **Play song** Moonlight Sonata"; " **Play genre** Classical"

TIP: Press the Browse button on the touchscreen to see all of the music on your USB device. Your Voice Command must match **exactly** how the artist, album, song and genre information is displayed.

Uconnect 4C/4C NAV Media

Phone

Making and answering hands-free phone calls is easy with Uconnect. When the Phonebook button is illuminated on your touchscreen, your system is ready. Check UconnectPhone.com for mobile phone compatibility and pairing instructions.

Push the Phone button . After the beep, say one of the following commands:

- " **Call** John Smith"
- " **Dial** 123-456-7890 and follow the system prompts"
- " **Redial** (call previous outgoing phone number)"
- " **Call back** (call previous incoming phone number)"

TIP: When providing a Voice Command, push the Phone button and say " **Call**," then pronounce the name **exactly** as it appears in your phone book. When a contact has multiple phone numbers, you can say " **Call** John Smith **work**."

Uconnect 4C/4C NAV Phone

Voice Text Reply — If Equipped

Uconnect announces **incoming** text messages. Push the VR button or Phone button (if enabled) and say " **Listen**." (Must have compatible mobile phone paired to Uconnect system.)

1. Once an incoming text message is read to you, push the VR button or Phone button (if enabled). After the beep, say: " **Reply**."
2. Listen to the Uconnect prompts. After the beep, repeat one of the pre-defined messages and follow the system prompts.

PRE-DEFINED VOICE TEXT REPLY RESPONSES		
Yes.	Stuck in traffic.	See you later.
No.	Start without me.	I'll be late.

PRE-DEFINED VOICE TEXT REPLY RESPONSES		
Okay.	Where are you?	I will be 5 <or 10, 15, 20, 25, 30, 45, 60> minutes late.
Call me.	Are you there yet?	
I'll call you later.	I need directions.	See you in 5 <or 10, 15, 20, 25, 30, 45, 60> minutes.
I'm on my way.	Can't talk right now.	
I'm lost.		Thanks.

NOTE: Only use the numbering listed, otherwise the system does not transpose the message.

TIP: Your mobile phone must have the full implementation of the **Message Access Profile (MAP)** to take advantage of this feature. For details about MAP, visit UconnectPhone.com.

Apple iPhone iOS 6 or later supports reading **incoming** text messages only. To enable this feature on your Apple iPhone, follow these four simple steps:

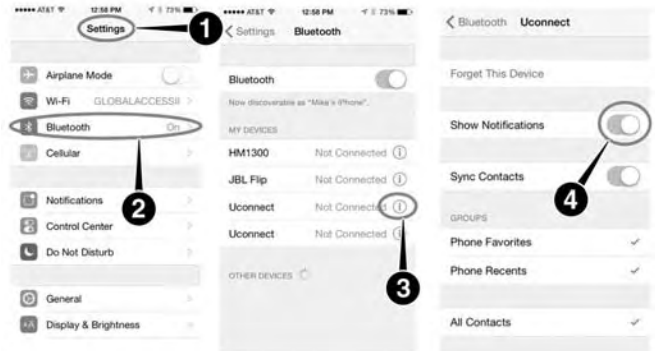

iPhone Notification Settings

1 — Select "Settings"
2 — Select "Bluetooth"
3 — Select The (i) For The Paired Vehicle
4 — Turn On "Show Notifications"

TIP: Voice Text Reply is not compatible with iPhone, but if your vehicle is equipped with Siri Eyes Free, you can use your voice to send a text message.

Climate

Too hot? Too cold? Adjust vehicle temperatures hands-free and keep everyone comfortable while you keep moving ahead. (If vehicle is equipped with climate control.)

Push the VR button . After the beep, say one of the following commands:

- " **Set driver temperature to** 70 **degrees**"
- " **Set passenger temperature to** 70 **degrees**"

TIP: Voice Command for Climate may only be used to adjust the interior temperature of your vehicle. Voice Command will not work to adjust the heated seats or steering wheel if equipped.

Uconnect 4C/4C NAV Climate

Navigation (4C NAV)

The Uconnect navigation feature helps you save time and become more productive when you know exactly how to get to where you want to go.

1. To enter a destination, push the VR button . After the beep, say: " **Find address** 800 Chrysler Drive Auburn Hills, Michigan."
2. Then follow the system prompts.

TIP: To start a POI search, push the VR button . After the beep, say: " **Find nearest** coffee shop."

Uconnect 4C NAV With 8.4–inch Display Navigation

SiriusXM Guardian (4C/4C NAV) — If Equipped

CAUTION!

Some SiriusXM Guardian services, including SOS Call and Roadside Assistance Call will NOT work without an operable LTE (voice/data) or 3G or 4G (data) network connection compatible with your device.

NOTE: Your vehicle may be transmitting data as authorized by the subscriber.

An included trial and/or subscription is required to take advantage of the SiriusXM Guardian services in the next section of this guide. To register with SiriusXM Guardian, press the Apps button on the Uconnect 4C/4C NAV touchscreen to get started.

NOTE: SiriusXM Guardian is available only on equipped vehicles purchased within the continental United States, Alaska, Hawaii and Canada. Services can only be used where coverage is available; see coverage map for details.

- SOS Call
- Theft Alarm Notification
- Remote Door Lock/Unlock
- Send & Go
- Vehicle Finder
- Stolen Vehicle Assistance
- Remote Vehicle Start**
- Remote Horn & Lights
- Roadside Assistance Call

Vehicle Health Reports**

Vehicle Health Alert**

Performance Pages Plus**

**If vehicle is equipped.

Register (4C/4C NAV)

To unlock the full potential of SiriusXM Guardian in your vehicle, you must activate your SiriusXM Guardian services.

1. Press the Apps icon on the bottom of your in-vehicle touchscreen.
2. Select the Activate Services icon from your list of apps.
3. Select "Customer Care" to speak with a SiriusXM Guardian Customer Care agent who will activate services in your vehicle, or select "Enter Email" to activate on the web.

- U.S. residents visit: www.siriusxm.com/guardian.
- Canadian residents visit: www.siriusxm.ca/guardian.

Vehicle Health Report/Alert (4C/4C NAV)

Your vehicle will send you a monthly email report, which summarizes the performance of your vehicle's key systems so you can stay on top of your vehicle's maintenance needs if you are registered for SiriusXM Guardian. Your vehicle will also send you Vehicle Health Alerts when it detects issues with its key systems that need your attention. For further information, refer to your Uconnect Owner's Manual Supplement.

Mobile App (4C/4C NAV)

You're only a few steps away from using remote commands and sending a destination from your phone to your vehicle.

Mobile App

To use the Uconnect Mobile App:

1. Once you have registered your SiriusXM Guardian services, download the Uconnect App to your mobile device. Use your Owner Account login and password to open the app.
2. Once on the "Remote" screen, you can begin using Remote Door Lock/Unlock, Remote Vehicle Start, and activate your horn and lights remotely, if equipped.
3. Press the "Location" button on the bottom menu bar of the app to bring up a map to locate your vehicle or send a location to your Uconnect Navigation using Vehicle Finder and Send & Go , if equipped.
4. Press the "Settings" side menu in the upper left corner of the app to bring up app settings.

NOTE: For further information please visit DriveUconnect.com (U.S. Residents) or DriveUconnect.ca (Canadian Residents).

SiriusXM Travel Link (4C NAV)

Need to find a gas station, view local movie listings, check a sports score or the 5 - day weather forecast? SiriusXM Travel Link is a suite of services that brings a wealth of information right to your Uconnect 4C NAV system. (Not available for Uconnect 4 system.)

Push the VR button . After the beep, say one of the following commands:

- " **Show fuel prices**"
- " **Show 5 - day weather forecast**"
- " **Show extended weather**"

TIP: Traffic alerts are not accessible with Voice Command.

SiriusXM Travel Link

Siri Eyes Free — If Equipped

Siri lets you use your voice to send text messages, select media, place phone calls and much more. Siri uses your natural language to understand what you mean and responds back to confirm your requests. The system is designed to keep your eyes on the road and your hands on the wheel by letting Siri help you perform useful tasks.

To enable Siri, push and hold, then release the Uconnect Voice Recognition (VR) button on the steering wheel. After you hear a double beep you can ask Siri to play podcasts and music, get directions, read text messages and many other useful requests.

Uconnect 4C/4C NAV With 8.4–inch Siri Eyes Free Available

Do Not Disturb

With Do Not Disturb, you can disable notifications from incoming calls and texts, allowing you to keep your eyes on the road and hands on the wheel. For your convenience, there is a counter display to keep track of your missed calls and text messages while you were using Do Not Disturb.

Do Not Disturb can automatically reply with a text message, a call or both, when declining an incoming call and send it to voicemail.

Automatic reply messages can be:

- "I am driving right now, I will get back to you shortly."
- Create a custom auto reply message up to 160 characters.

NOTE: Only the first 25 characters can be seen on the touchscreen while typing a custom message.

While in Do Not Disturb, Conference Call can be selected so you can still place a second call without being interrupted by incoming calls.

NOTE:

- Reply with text message is not compatible with iPhones.
- Auto reply with text message is only available on phones that support Bluetooth MAP.

Android Auto — If Equipped

NOTE: Feature availability depends on your carrier and mobile phone manufacturer. Some Android Auto features may or may not be available in every region and/or language.

Android Auto allows you to use your voice to interact with Android's best-in-class speech technology through your vehicle's voice recognition system, and use your smartphone's data plan to project your Android powered smartphone and a number of its apps onto your Uconnect touchscreen. Connect your Android 5.0 (Lollipop), or higher, to one of the media USB ports, using the factory-provided USB cable, and press the new Android Auto icon that replaces your "Phone" icon on the main menu bar to begin Android Auto. Push and hold the VR button on the steering wheel, or press and hold the "Microphone" icon within Android Auto, to activate Android's VR, which recognizes natural voice commands, to use a list of your smartphone's features:

- Maps
- Music
- Phone
- Text Messages
- Additional Apps

Android Auto On 8.4-inch Display

Refer to your Uconnect Owner's Manual Supplement for further information.

NOTE: Requires compatible smartphone running Android 5.0 Lollipop or higher and download app on Google Play. Android, Android Auto, and Google Play are trademarks of Google Inc.

Apple CarPlay — If Equipped

NOTE: Feature availability depends on your carrier and mobile phone manufacturer. Some Apple CarPlay features may or may not be available in every region and/or language.

Apple CarPlay allows you to use your voice to interact with Siri through your vehicle's voice recognition system, and use your smartphone's data plan to project your iPhone and a number of its apps onto your Uconnect touchscreen. Connect your iPhone 5, or higher, to one of the media USB ports, using the factory-provided Lightning cable, and press the new CarPlay icon that replaces your "Phone" icon on the main menu bar to begin Apple CarPlay. Press and hold the VR button on the steering wheel, or press and hold the "Home" button within Apple CarPlay, to activate Siri, which recognizes natural voice commands to use a list of your iPhone's features:

- Phone
- Music
- Messages
- Maps
- Additional Apps

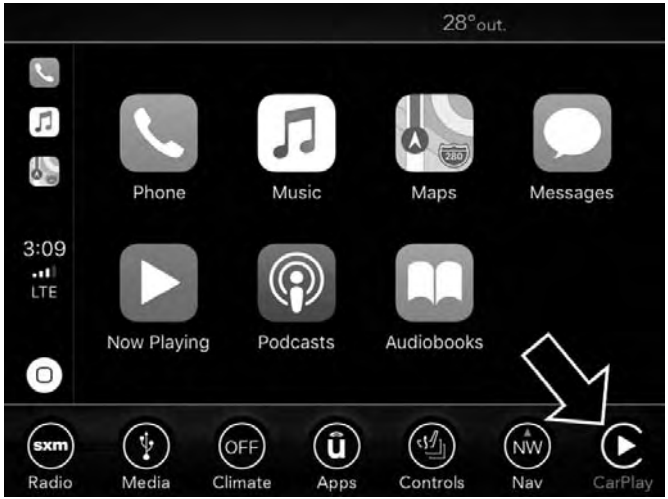

Apple CarPlay On 8.4-inch Display

Refer to your Uconnect Owner's Manual Supplement for further information.

NOTE: Requires compatible iPhone. See dealer for phone compatibility. Data plan rates apply. Vehicle user interface is a product of Apple. Apple CarPlay is a trademark of Apple Inc. iPhone is a trademark of Apple Inc., registered in the US and other countries. Apple terms of use and privacy statements apply.

General Information

The following regulatory statement applies to all Radio Frequency (RF) devices equipped in this vehicle:

This device complies with Part 15 of the FCC Rules and with Industry Canada license-exempt RSS standard(s). Operation is subject to the following two conditions:

1. This device may not cause harmful interference, and
2. This device must accept any interference received, including interference that may cause undesired operation.

NOTE: Changes or modifications not expressly approved by the party responsible for compliance could void the user's authority to operate the equipment.

Additional Information

© 2018 FCA US LLC. All rights reserved. Mopar and Uconnect are registered trademarks and Mopar Owner Connect is a trademark of FCA US LLC. Android is a trademark of Google Inc. SiriusXM and all related marks and logos are trademarks of SiriusXM Radio Inc.

Uconnect System Support:

- U.S. residents visit www.DriveUconnect.com or call: 1-877-855-8400(24 hours a day 7 days a week)
- Canadian residents visit www.DriveUconnect.ca or call: 1-800-465-2001(English) or 1-800-387-9983(French)

SiriusXM Guardian services support:

- U.S. residents visit www.siriusxm.com/guardian or call: 1-844-796-4827
- Canadian residents visit www.siriusxm.ca/guardian or call: 1-877-324-9091

CUSTOMER ASSISTANCE

CONTENTS

- SUGGESTIONS FOR OBTAINING SERVICE FOR YOUR VEHICLE 466
  - Prepare For The Appointment 466
  - Prepare A List 466
  - Be Reasonable With Requests 466
- IF YOU NEED ASSISTANCE 466
  - FCA US LLC Customer Center 467
  - FCA Canada Inc. Customer Center. 467
  - In Mexico Contact 467
  - Puerto Rico And U.S. Virgin Islands. 467
  - Customer Assistance For The Hearing Or Speech Impaired (TDD/TTY) 468
  - Service Contract 468
- WARRANTY INFORMATION 469
- MOPAR PARTS 469
- REPORTING SAFETY DEFECTS 469
  - In The 50 United States And Washington, D.C. . .469
  - In Canada 470
- PUBLICATION ORDER FORMS 470

SUGGESTIONS FOR OBTAINING SERVICE FOR YOUR VEHICLE

Prepare For The Appointment

If you are having warranty work done, be sure to have the right papers with you. Take your warranty folder. All work to be performed may not be covered by the warranty. Discuss additional charges with the service manager. Keep a maintenance log of your vehicle's service history. This can often provide a clue to the current problem.

Prepare A List

Make a written list of your vehicle's problems or the specific work you want done. If you've had an accident or work done that is not on your maintenance log, let the service advisor know.

Be Reasonable With Requests

If you list a number of items and you must have your vehicle by the end of the day, discuss the situation with the service advisor and list the items in order of priority. At many authorized dealers, you may obtain a rental vehicle at a minimal daily charge. If you need a rental, it is advisable to make these arrangements when you call for an appointment.

IF YOU NEED ASSISTANCE

The manufacturer and its authorized dealer are vitally interested in your satisfaction. We want you to be happy with our products and services.

Warranty service must be done by an authorized dealer. We strongly recommend that you take the vehicle to an authorized dealer. They know your vehicle the best, and are most concerned that you get prompt and high quality service. The manufacturer's authorized dealer have the facilities, factory-trained technicians, special tools, and the latest information to ensure the vehicle is fixed correctly and in a timely manner.

This is why you should always talk to an authorized dealer service manager first. Most matters can be resolved with this process.

- If for some reason you are still not satisfied, talk to the general manager or owner of the authorized dealer. They want to know if you need assistance.
- If an authorized dealer is unable to resolve the concern, you may contact the manufacturer's customer center.

Any communication to the manufacturer's customer center should include the following information:

- Owner's name and address
- Owner's telephone number (home and office)
- Authorized dealer name
- Vehicle Identification Number (VIN)
- Vehicle delivery date and mileage

FCA US LLC Customer Center

P.O. Box 21–8004

Auburn Hills, MI 48321–8004

Phone: (800) 247-9753

FCA Canada Inc. Customer Center

P.O. Box 1621

Windsor, Ontario N9A 4H6

Phone: (800) 465-2001 English / (800) 387-9983 French

In Mexico Contact

Av. Prolongacion Paseo de la Reforma, 1240

Sante Fe C.P. 05109

Mexico, D. F.

In Mexico City: 800-505-1300

Outside Mexico City: +(52)55 50817568

Puerto Rico And U.S. Virgin Islands

FCA Caribbean LLC

P.O. Box 191857

San Juan 00919-1857

Phone: (800) 247-9753

Fax: (787) 782-3345

Customer Assistance For The Hearing Or Speech Impaired (TDD/TTY)

To assist customers who have hearing difficulties, the manufacturer has installed special TDD (Telecommunication Devices for the Deaf) equipment at its customer center. Any hearing or speech impaired customer, who has access to a TDD or a conventional teletypewriter (TTY) in the United States, can communicate with the manufacturer by dialing 1-800-380-CHRY.

Canadian residents with hearing difficulties that require assistance can use the special needs relay service offered by Bell Canada. For TTY teletypewriter users, dial 711 and for Voice callers, dial 1-800-855-0511 to connect with a Bell Relay Service operator.

Service Contract

You may have purchased a service contract for a vehicle to help protect you from the high cost of unexpected repairs after the manufacturer's New Vehicle Limited Warranty expires. The manufacturer stands behind only the manufacturer's service contracts. If you purchased a manufacturer's service contract, you will receive Plan Provisions and an Owner Identification Card in the mail within three weeks of the vehicle delivery date. If you have any questions about the service contract, call the manufacturer's Service Contract National Customer Hotline at 1-800-521-9922 (Canadian residents, call (800) 465-2001 English / (800) 387-9983 French).

The manufacturer will not stand behind any service contract that is not the manufacturer's service contract. It is not responsible for any service contract other than the manufacturer's service contract. If you purchased a service contract that is not a manufacturer's service contract, and you require service after the manufacturer's New Vehicle Limited Warranty expires, please refer to the contract documents, and contact the person listed in those documents.

We appreciate that you have made a major investment when you purchased the vehicle. An authorized dealer has also made a major investment in facilities, tools, and training to assure that you are absolutely delighted with the ownership experience. You will be pleased with their sincere efforts to resolve any warranty issues or related concerns.

WARNING!

Engine exhaust (internal combustion engines only), some of its constituents, and certain vehicle components contain, or emit, chemicals known to the State of California to cause cancer and birth defects, or other reproductive harm. In addition, certain fluids contained in vehicles and certain products of component wear contain, or emit, chemicals known to the State of California to cause cancer and birth defects, or other reproductive harm.

WARRANTY INFORMATION

See the Warranty Information Booklet for the terms and provisions of FCA US LLC warranties applicable to this vehicle and market.

MOPAR PARTS

Mopar fluids, lubricants, parts, and accessories are available from an authorized dealer. They are recommended for your vehicle in order to help keep the vehicle operating at its best.

REPORTING SAFETY DEFECTS

In The 50 United States And Washington, D.C.

If you believe that your vehicle has a defect that could cause a crash or cause injury or death, you should immediately inform the National Highway Traffic Safety Administration (NHTSA) in addition to notifying FCA US LLC.

If NHTSA receives similar complaints, it may open an investigation, and if it finds that a safety defect exists in a group of vehicles, it may order a recall and remedy campaign. However, NHTSA cannot become involved in individual problems between you, an authorized dealer or FCA US LLC.

To contact NHTSA, you may call the Vehicle Safety Hotline toll free at 1-888-327-4236 (TTY: 1-800-424-9153); or go to http://www.safercar.gov; or write to: Administrator, NHTSA, 1200 New Jersey Avenue, SE., West Building, Washington, D.C. 20590. You can also obtain other information about motor vehicle safety from http://www.safercar.gov.

In Canada

If you believe that your vehicle has a safety defect, you should contact the Customer Service Department immediately. Canadian customers who wish to report a safety defect to the Canadian government should contact Transport Canada, Motor Vehicle Defect Investigations and Recalls at 1-800-333-0510 or go to http://www.tc.gc.ca/roadsafety/.

PUBLICATION ORDER FORMS

To order the following manuals, you may use either the website or the phone numbers listed below.

Service Manuals

These comprehensive Service Manuals provide the information that students and professional technicians need in diagnosing/troubleshooting, problem solving, maintaining, servicing, and repairing FCA US LLC vehicles. A complete working knowledge of the vehicle, system, and/or components is written in straightforward language with illustrations, diagrams, and charts.

Diagnostic Procedure Manuals

Diagnostic Procedure Manuals are filled with diagrams, charts and detailed illustrations. These practical manuals make it easy for students and technicians to find and fix problems on computer-controlled vehicle systems and features. They show exactly how to find and correct problems the first time, using step-by-step troubleshooting and drivability procedures, proven diagnostic tests and a complete list of all tools and equipment.

Owner's Manuals

These Owner's Manuals have been prepared with the assistance of service and engineering specialists to acquaint you with specific FCA US LLC vehicles. Included are starting, operating, emergency and maintenance procedures as well as specifications, capabilities and safety tips.

Call toll free at:

- **1-800-890-4038 (U.S.)**
- **1-800-387-1143 (Canada)**

Or

Visit us on the Worldwide Web at:

- www.techauthority.com (U.S.)

INDEX

About Your Brakes 405
Adaptive Cruise Control (ACC) (Cruise Control) 244
Adding Engine Coolant (Antifreeze) 366
Adding Fuel 281
Adding Washing Fluid 350
Additives, Fuel 408
Adjust
  Forward 47
  Rearward 47
Air Bag 186
  Advance Front Air Bag 186
  Air Bag Operation 188
  Air Bag Warning Light 184
  Driver Knee Air Bag 189
  Enhanced Accident Response 194, 339
  Event Data Recorder (EDR) 339
  Front Air Bag 186
  If Deployment Occurs 193
  Knee Impact Bolsters 188
  Maintaining Your Air Bag System 196
  Maintenance 196
  Redundant Air Bag Warning Light 185
  Side Air Bags 189
  Transporting Pets 212
Air Bag Light 131, 184, 213
Air Cleaner, Engine (Engine Air Cleaner Filter). 355
Air Conditioner Maintenance 356
Air Conditioner Refrigerant 356
Air Conditioner System. 79, 356
Air Conditioning. 84
Air Conditioning Filter 86, 357
Air Conditioning, Operating Tips 85
Air Filter 355
Air Pressure
  Tires 384
Alarm
  Arm The System 35, 37
  Panic 22
  Rearm The System 37
  Security Alarm 35, 135
Alarm System
  Security Alarm 35
All Wheel Drive
  Towing 338
All Wheel Drive (AWD) 372
Alterations/Modifications
  Vehicle 5
Android Auto 461
Antifreeze (Engine Coolant) 365, 414
  Disposal 367

Anti-Lock Brake System (ABS) 146
Anti-Lock Warning Light 139
Apple CarPlay 462
Arming System
  Security Alarm 35
Assist, Hill Start 153
Audio Systems (Radio). 421
Auto Down Power Windows 88
Automatic Door Locks 42, 43
Automatic Headlights 68
Automatic High Beams 67
Automatic Temperature Control (ATC) 84
Automatic Transmission. 230
  Adding Fluid 372, 415, 417
  Fluid And Filter Change 372
  Fluid Change 372
  Fluid Level Check 371
  Fluid Type 371, 415, 417
  Special Additives 371
Automatic Transmission Limp Home Mode 42, 236
Autostick
  Operation 237
Auto Up Power Windows 88
AUX Cord 447
Auxiliary Electrical Outlet (Power Outlet) 113
AWD
  Towing 338
Axle Fluid 415, 417
Axle Lubrication. 415, 417

Back-Up 279
Battery. 133, 351
  Charging System Light 133
  Keyless Key Fob Replacement 23
  Location 351
Belts, Seat. 213
Beverage Holder Cooled (Cupholder) 111
Beverage Holder Heated (Cupholder) 111
Body Mechanism Lubrication 359
B-Pillar Location 379
Brake Assist System. 147
Brake Control System. 147
Brake Fluid 369, 415, 417
Brake System 369, 405
  Fluid Check 369, 415, 417
  Master Cylinder 369
  Parking 226
  Warning Light 131, 405
Brake/Transmission Interlock 230
Break-In Recommendations, New Vehicle. 225

Brightness, Interior Lights 73
Bulb Replacement 305
Bulbs, Light 215, 305

Camera, Rear 279
Capacities, Fluid 414
Caps, Filler
  Oil (Engine) 348, 354
  Radiator (Coolant Pressure) 367
Carbon Monoxide Warning 212, 411
Cargo
  Vehicle Loading 285
Cargo Area Cover 97
Cargo Compartment 97
Car Washes. 398
Cellular Phone 448
Certification Label 285
Chains, Tire 394
Changing A Flat Tire 373
Charging
  Wireless 116
Chart, Tire Sizing. 375
Check Engine Light (Malfunction Indicator Light). . . .143
Checking Your Vehicle For Safety 212
Checks, Safety. 212
Child Restraint 197
Child Restraints
  Booster Seats 200
  Child Seat Installation 208
  How To Stow An unused ALR Seat Belt 206
  Infant And Child Restraints 199
  Lower Anchors And Tethers For Children 202
  Older Children And Child Restraints 199
  Seating Positions 201
Child Safety Locks 43
Clean Air Gasoline 408
Cleaning
  Wheels 393
Climate Control 78, 79
  Automatic 79
Coin Holder 107
Cold Weather Operation. 224
Compact Spare Tire 391
Console
  Floor 107
Contract, Service 468
Cooling Pressure Cap (Radiator Cap) 367
Cooling System 364
  Adding Coolant (Antifreeze) 366
  Coolant Level 365, 368

Cooling Capacity 414
Disposal Of Used Coolant 367
Drain, Flush, And Refill 365
Inspection 368
Points To Remember 368
Pressure Cap 367
Radiator Cap 367
Selection Of Coolant (Antifreeze) 365, 414, 415
Corrosion Protection 398
Cruise Control (Speed Control). 241, 244
Cruise Light 140, 141
Cupholders. 109
Customer Assistance 466
Cybersecurity 422

Daytime Running Lights 67
Dealer Service 352
Deck Lid
Power Release 95
Defroster, Windshield. 213
Delay (Intermittent) Wipers 76
Diagnostic System, Onboard 142
Dimmer Switch
Headlight 67
Dipsticks
Oil (Engine) 350
Disabled Vehicle Towing 336
Disposal
Antifreeze (Engine Coolant) 367
Do Not Disturb 460
Door Ajar 133
Door Ajar Light. 133
Door Locks
Automatic 43
Child-Protection Door Lock — Rear Doors 43
Doors. 37
Drag And Drop Menu 421
Driver's Seat Back Tilt 44
Driving
Through Flowing, Rising, Or Shallow Standing Water 297

E-85 Fuel 411
Electric Brake Control System 147
Anti-Lock Brake System 146
Electronic Roll Mitigation 148, 155
Electric Remote Mirrors 62
Electronic Power Distribution Center (Fuses) 312
Electronic Speed Control (Cruise Control) 241

Electronic Stability Control (ESC) 149
Electronic Throttle Control Warning Light 133
Emergency, In Case Of
Freeing Vehicle When Stuck 335
Hazard Warning Flasher 300
Jacking 321, 373
Jump Starting 329
Towing 336
Emission Control System Maintenance. 143
Engine 348, 349
Air Cleaner 355
Block Heater 225
Break-In Recommendations 225
Checking Oil Level 350
Compartment 348, 349
Compartment Identification 348
Coolant (Antifreeze) 365, 415
Cooling 364
Exhaust Gas Caution 212, 411
Fails To Start 224
Flooded, Starting 224
Fuel Requirements 407, 414
Jump Starting 329
Oil 353, 414, 415
Oil Filler Cap 348, 354
Oil Filter 355
Oil Selection 353, 414
Oil Synthetic 354
Overheating 332
Starting 220, 221
Engine Oil Viscosity 353, 354
Engine Oil Viscosity Chart 353
Enhanced Accident Response Feature 194, 339
Ethanol 409, 411
Exhaust Gas Cautions 212, 411
Exhaust System 212, 362
Exterior Lighting. 66
Exterior Lights 66, 215

Filters
Air Cleaner 355
Air Conditioning 86, 357
Engine Oil 355, 415
Engine Oil Disposal 355
Flashers 300
Hazard Warning 300
Turn Signals 70, 141, 215
Flash-To-Pass 68
Flexible Fuel Vehicles
Cruising Range 413

Engine Oil 412
Fuel Requirements 411, 412
Maintenance 413
Replacement Parts 413
Starting 413
Flooded Engine Starting 224
Floor Console 107
Fluid, Brake 415, 417
Fluid Capacities. 414
Fluid Leaks. 215
Fluid Level Checks
Brake 369
Cooling System 365
Engine Oil 350
Transfer Case 372
Fluids And Lubricants 415
Fog Lights 70
Fold-Flat Seats 44
Folding Rear Seats 45
Forward Collision Warning. 163
Four-Way Hazard Flasher. 300
Freeing A Stuck Vehicle 335
Fuel 407
Additives 408
Clean Air 408
Ethanol 409, 411
Flexible 411
Gasoline 407
Gauge 139
Materials Added 408
Methanol 409
Octane Rating 407, 408, 415
Requirements 407, 414
Specifications 415
Tank Capacity 414
Fuses 310

Garage Door Opener (HomeLink) 100
Gasoline, Clean Air 408
Gasoline, Reformulated 408
Gauges
Fuel 139
Gear Ranges 232
Glass Cleaning 401
Gross Axle Weight Rating 285, 287
Gross Vehicle Weight Rating 285, 286
GVWR 285

Hazard
Driving Through Flowing, Rising, Or Shallow Standing Water 297
Hazard Warning Flashers 300
Headlights 307
Automatic 68
Cleaning 398
High Beam/Low Beam Select Switch 67
Lights On Reminder 69
On With Wipers 68
Passing 68
Switch 66
Time Delay 69
Washers 350
Head Restraints 55, 56
Head Rests 55, 56
Heated Mirrors 64
Heater, Engine Block 225
High Beam/Low Beam Select (Dimmer) Switch 67
Hill Start Assist 153
Hitches
Trailer Towing 288
Holder, Coin 107
HomeLink (Garage Door Opener) 100
Hood Prop 94
Hood Release 94

Ignition 27
Switch 27
Inside Rearview Mirror 60, 300
Instrument Cluster 120, 121
Descriptions 141
Display 122, 125
Instrument Panel Lens Cleaning 401
Interior Appearance Care 400
Interior Lights. 71
Intermittent Wipers (Delay Wipers). 76
Introduction 4
In Vehicle Help
Vehicle User Guide 17

Jacking Instructions 324
Jack Location 321
Jack Operation 324, 373
Jump Starting 329

Key Fob
Arm The System 35
Panic Alarm 22
Programming Additional Key Fobs 26, 34

Unlatch The Trunk 22
Key Fob Battery Service (Remote Keyless Entry) 23
Key Fob Programming (Remote Keyless Entry) 26
Key-In Reminder. 29
Keyless Enter-N-Go 39, 221
Enter The Trunk 22
Passive Entry 39
Passive Entry Programming 39
Keys 19
Replacement 26, 34

Lane Change And Turn Signals 70
Lane Change Assist. 70
LaneSense. 275
Lap/Shoulder Belts 175
Latches. 215
Hood 94
Lead Free Gasoline 407
Leaks, Fluid 215
Life Of Tires 387
Light Bulbs 215, 305
Lights. 215
Air Bag 131, 184, 213
Automatic Headlights 68
Brake Assist Warning 152
Brake Warning 131, 405
Bulb Replacement 305
Cruise 140, 141
Daytime Running 67
Dimmer Switch, Headlight 66, 67
Electronic Stability Program(ESP) Indicator 134
Exterior 66, 215
Fog 70
Hazard Warning Flasher 300
Headlights 66, 69, 307
Headlights On With Wipers 68
Headlight Switch 66
High Beam 67
High Beam/Low Beam Select 67
Instrument Cluster 66
Intensity Control 73
Interior 71
License 310
Lights On Reminder 69
Malfunction Indicator (Check Engine) 135
Map 72
Park 68, 141
Passing 68
Reading 72
Seat Belt Reminder 134

Security Alarm 135
Service 305
Traction Control 152
Turn Signals 66, 70, 141, 215
Vanity Mirror 65
Warning Instrument Cluster Descriptions 134, 141
Loading Vehicle 285, 286
Capacities 286
Tires 379
Load Leveling System 100
Load Shed Battery Saver On. 129
Load Shed Electrical Load Reduction. 129
Load Shed Intelligent Battery Sensor 129
Locks
Automatic Door 43
Auto Unlock 42
Child Protection 43
Power Door 38
Low Tire Pressure System. 166
Lubrication, Body 359
Lug Nuts/Bolts 406

Maintenance 93
Maintenance Free Battery 351
Maintenance Schedule 343, 344
Malfunction Indicator Light (Check Engine) 135, 143
Manual
Park Release 333
Service 470
Media Hub 447
Memory Feature (Memory Seats) 48
Memory Seat 48
Methanol 409
Mirrors 60
Electric Powered 62
Electric Remote 62
Heated 64
Outside 61
Rearview 60, 300
Vanity 65
Modifications/Alterations
Vehicle 5
Monitor, Tire Pressure System. 166
Mopar Parts 469
MP3 Control 447
Multi-Function Control Lever 66

New Vehicle Break-In Period 225

Occupant Restraints 172

Octane Rating, Gasoline (Fuel) 407, 408, 415
Oil Change Indicator 124
Reset 124
Oil, Engine 353, 415
Capacity 414
Change Interval 353
Checking 350
Dipstick 350
Disposal 355
Filter 355, 415
Filter Disposal 355
Identification Logo 353
Materials Added To 354
Pressure Warning Light 134
Recommendation 353, 414
Synthetic 354
Viscosity 353, 354, 414
Oil Filter, Change 355
Oil Filter, Selection 355
Oil Pressure Light 134
Onboard Diagnostic System 142
Operating Precautions 142
Operator Manual
Owner's Manual 5, 470
Outside Rearview Mirrors 61
Overheating, Engine 332
Owner's Manual (Operator Manual) 5

Paddle Shifters 237
Paddle Shift Mode 237
Paint Care 398
Panic Alarm 22
Parking Brake 226
ParkSense System, Rear 264
Passive Entry 39
Personalized Main Menu 421
Pets 212
Pinch Protection 93
Placard, Tire And Loading Information 379
Power
Brakes 405
Deck Lid Release 95
Distribution Center (Fuses) 316
Door Locks 38
Mirrors 62
Outlet (Auxiliary Electrical Outlet) 113
Seats 46
Steering 239
Sunroof 90
Tilt/Telescoping Steering Column 58

Windows 87
Power Seats
Forward 47
Lumbar 48
Rearward 47
Recline 47
Power Steering Fluid 415
Pregnant Women And Seat Belts 181
Preparation For Jacking 323
Pretensioners
Seat Belts 181

Radial Ply Tires 385
Radiator Cap (Coolant Pressure Cap). 367
Radio Frequency
General Information 27, 33, 35, 42
Radio Operation 448
Rain Sensitive Wiper System 77
Rear Axle (Differential) 372
Rear Camera 279
Rear Cross Path. 161
Rear ParkSense System 264
Rear Seats, Folding 45
Rear Wheel Drive (RWD)
Towing 338
Recreational Towing. 296
Reformulated Gasoline. 408
Refrigerant 356
Release, Hood. 94
Reminder, Lights On 69
Reminder, Seat Belt 174
Remote Keyless Entry
Arm The Alarm 35
Panic Alarm 22
Programming Additional Key Fobs 26, 34
Unlatch The Trunk 22
Remote Starting
Exit Remote Start Mode 32
Uconnect Customer Programmable Features 33
Uconnect Settings 33
Remote Trunk Release 95
Replacement Bulbs 305
Replacement Keys 26, 34
Replacement Tires 388
Reporting Safety Defects 469
Restraints, Child 197
Restraints, Head. 55, 56
Rocking Vehicle When Stuck. 335
Rotation, Tires 395

Safety Checks Inside Vehicle 213
Safety Checks Outside Vehicle 215
Safety Defects, Reporting 469
Safety, Exhaust Gas 212
Safety Information, Tire 373
Safety Tips 212
Schedule, Maintenance 343, 344
Seat Belt Reminder 134
Seat Belts 174, 213
Adjustable Shoulder Belt 179
Adjustable Upper Shoulder Anchorage 179
Adjustable Upper Shoulder Belt Anchorage 179
Automatic Locking Retractor (ALR) 182
Child Restraints 197
Energy Management Feature 181
Extender 180
Front Seat 174, 175, 177
Inspection 213
Lap/Shoulder Belt Operation 177
Lap/Shoulder Belts 175
Lap/Shoulder Belt Untwisting 179
Operating Instructions 177
Pregnant Women 181
Pretensioners 181
Rear Seat 175
Reminder 174
Seat Belt Extender 180
Seat Belt Pretensioner 181
Untwisting Procedure 179
Seat Belts Maintenance 400
Seats 44, 47, 52
Adjustment 44, 47
Easy Entry 51
Head Restraints 55, 56
Heated 52
Height Adjustment 46
Power 46
Rear Folding 44, 45
Seatback Release 45
Tilting 44, 46
Vented 54
Ventilated 54
Security Alarm 35, 135
Arm The System 35
Selection Of Coolant (Antifreeze) 415
Sentry Key
Key Programming 34
Sentry Key (Immobilizer) 33
Sentry Key Replacement 26, 34
Service Assistance 466

Service Contract 468
Service Manuals 470
Shifting 228
Automatic Transmission 228, 230
Shoulder Belts 175
Side View Mirror Adjustment 61
Signals, Turn 70, 141, 215
Siri 460
SiriusXM Guardian
Vehicle Health Alert 458
Snow Chains (Tire Chains) 394
Snow Tires 390
Spare Tires 321, 390, 391, 392
Spark Plugs 415
Specifications
Fuel (Gasoline) 415
Oil 415
Speed Control
Accel/Decel 242, 243
Accel/Decel (ACC Only) 249
Cancel 243
Resume 243
Set 242
Speed Control (Cruise Control) 241, 244
Sport Mode 239
Starting 220, 221
Automatic Transmission 220
Button 27
Cold Weather 224
Engine Fails To Start 224
Starting And Operating 220, 221
Starting Procedures 220, 221
Steering 58
Column Lock 58
Power 239
Tilt Column 58
Wheel, Heated 59
Wheel, Tilt 58
Steering Wheel Audio Controls 445
Steering Wheel Mounted Sound System Controls 445
Storage 107, 397
Storage, Vehicle 86, 397
Storing Your Vehicle 397
Stuck, Freeing 335
Sunglasses Storage 117
Sun Roof 90, 93
Closing 92
Sunshade Operation 92
Supplemental Restraint System – Air Bag 186

Synthetic Engine Oil 354

Telescoping Steering Column 58
Temperature Control, Automatic (ATC) 84
Tilt Steering Column 58
Time Delay
  Headlight 69
Tire And Loading Information Placard. 379
Tire Markings 373
Tires 215, 383, 390, 391, 396
  Aging (Life Of Tires) 387
  Air Pressure 383
  Chains 394
  Changing 321, 324, 328, 373
  Compact Spare 391
  Flat Changing 328
  General Information 383, 390, 391
  High Speed 385
  Inflation Pressure 384
  Jacking 324, 373
  Life Of Tires 387
  Load Capacity 379, 380
  Pressure Monitoring System (TPMS) 137, 166
  Quality Grading 396
  Radial 385
  Replacement 328, 388
  Rotation 395
  Safety 373, 383
  Sizes 375
  Snow Tires 390
  Spare Tires 321, 390, 391, 392
  Spinning 386
  Trailer Towing 292
  Tread Wear Indicators 387
  Wheel Mounting 328
  Wheel Nut Torque 406
Tire Safety Information. 373
Tongue Weight/Trailer Weight 290
To Open Hood 94
Towing. 286
  Behind A Motorhome 296
  Disabled Vehicle 336
  Guide 289
  Recreational 296
  Weight 289
Towing Behind A Motorhome 296
Traction 296
Traction Control 155
Trailer Towing. 286
  Cooling System Tips 295

Hitches 288
Minimum Requirements 291
Tips 295
Trailer And Tongue Weight 290
Wiring 293
Trailer Towing Guide 289
Trailer Weight 289
Transfer Case
Fluid 372, 415, 417
Maintenance 372
Transmission 230
Automatic 230, 371
Fluid 415, 417
Maintenance 371
Shifting 228
Transporting Pets 212
Tread Wear Indicators 387
Trunk Lid (Deck Lid) 95
Trunk Release Remote Control 95
Turn Signals 70, 141

Uconnect
Uconnect Settings 21, 22, 33, 423
Uconnect 4C/4C Nav With 8.4-Inch Display 424
Uconnect Settings
Customer Programmable Features 33, 39, 423
Passive Entry Programming 39
Uniform Tire Quality Grades 396
Universal Garage Door Opener (HomeLink) 100
Universal Transmitter 100
Unleaded Gasoline 407
Untwisting Procedure, Seat Belt 179
USB 447

Vanity Mirrors 65
Vehicle Certification Label 285
Vehicle Identification Number (VIN) 405
Vehicle Loading 285, 286, 380
Vehicle Modifications/Alterations 5
Vehicle Security Alarm 35
Vehicle Storage 86, 397
Vehicle User Guide
In Vehicle Help 17
Navigation 17
Operating Instructions 17
Searching User Guide 17
Viscosity, Engine Oil 353, 354
Voice Command 449

Voice Recognition System (VR) 449

Warning Flashers, Hazard 300
Warning Lights (Instrument Cluster Descriptions). . . .137
Warnings And Cautions 5
Warranty Information 469
Washer
  Adding Fluid 350
Washers, Windshield. 76, 350
Washing Vehicle 398
Water
  Driving Through 297
Wheel And Wheel Tire Care 393
Wheel And Wheel Tire Trim 393
Wind Buffeting 90, 92
Window Fogging 86
Windows 87
  Power 87
  Reset Auto-Up 89
Windshield Defroster 213
Windshield Washers 75, 76
  Fluid 350
Windshield Wiper Blades 360
Windshield Wipers 75
Wipers Blade Replacement 360
Wipers, Intermittent 76
Wipers, Rain Sensitive 77
Wireless Charging Pad 116

INSTALLATION OF RADIO TRANSMITTING EQUIPMENT

Special design considerations are incorporated into this vehicle's electronic system to provide immunity to radio frequency signals. Mobile two-way radios and telephone equipment must be installed properly by trained personnel. The following must be observed during installation.

The positive power connection should be made directly to the battery and fused as close to the battery as possible. The negative power connection should be made to body sheet metal adjacent to the negative battery connection. This connection should not be fused.

Antennas for two-way radios should be mounted on the roof or the rear area of the vehicle. Care should be used in mounting antennas with magnet bases. Magnets may affect the accuracy or operation of the compass on vehicles so equipped.

The antenna cable should be as short as practical and routed away from the vehicle wiring when possible. Use only fully shielded coaxial cable.

Carefully match the antenna and cable to the radio to ensure a low Standing Wave Ratio (SWR).

Mobile radio equipment with output power greater than normal may require special precautions.

All installations should be checked for possible interference between the communications equipment and the vehicle's electronic systems.

⚠ WARNING:

Operating, servicing and maintaining a passenger vehicle or off-road highway motor vehicle can expose you to chemicals including engine exhaust, carbon monoxide, phthalates, and lead, which are known to the State of California to cause cancer and birth defects or other reproductive harm. To minimize exposure, avoid breathing exhaust, do not idle the engine except as necessary, service your vehicle in a well-ventilated area and wear gloves or wash your hands frequently when servicing your vehicle. For more information go to www.P65Warnings.ca.gov/passenger-vehicle.

CHRYSLER

19LX-126-AB
©2018 FCA US LLC. All Rights Reserved.
Chrysler is a registered trademark of FCA US LLC.

Second Edition
Printed in the U.S.A.